System Overview

ETSI BRAN - HA vs. IEEE 802.11

Marianna Goldhammer

BreezeCOM

ACCESS DIVISION

Presentation Scope

- **BRAN - Hiperaccess System Architecture**
- **IEEE 802.11 System Architecture**
- **Critical overview of IEEE 802.11 vs. ETSI BRAN**
  - Architecture aspects
    - System implications
    - Cost implications
- **Conclusions**
  - BRAN-HA vs. 802.11
  - Wireless Access vs. Wireless LAN
  - Proposed common IEEE / BRAN model

BRAN HIPERACCESS SYSTEM ARCHITECTURE

BRAN HIPERACCESS SERVICES

- **Who is HIPERACCESS for?**
  - Residential customers
  - Small to medium sized enterprises
- **Supported rate:**
  - at least 25Mb/s peak in up-link+down-link
  - variable on demand
- **Services:**
  - Internet access (server or user)
  - Data (LAN, home working, computer gaming)
  - Video (on demand, conferencing)
  - Legacy services (toll quality POTS, ISDN, VBModems)

BRAN HIPERACCESS Performance Requirements

- **Min. access network delay:**
  - 5ms for ATM
  - 10 ms for POTS and ISDN
- **Bit error rate**
  - 1e-3 for POTS
  - 1e-6 for ISDN
- **Cell error rate**
  - [1e-10] for ATM
- **Route set-up time**
  - 50ms for POTS, ISDN, ATM

Reference Models

- **General Reference Model**
- **General Protocol Model**
- **Both reference models should align with:**
  - ATM Forum
  - BRAN

BRAN GRM as might be applied to HIPERACCESS

APT - Access Point Tranceiver
APC - Access Point Controller
RR - Radio Relay

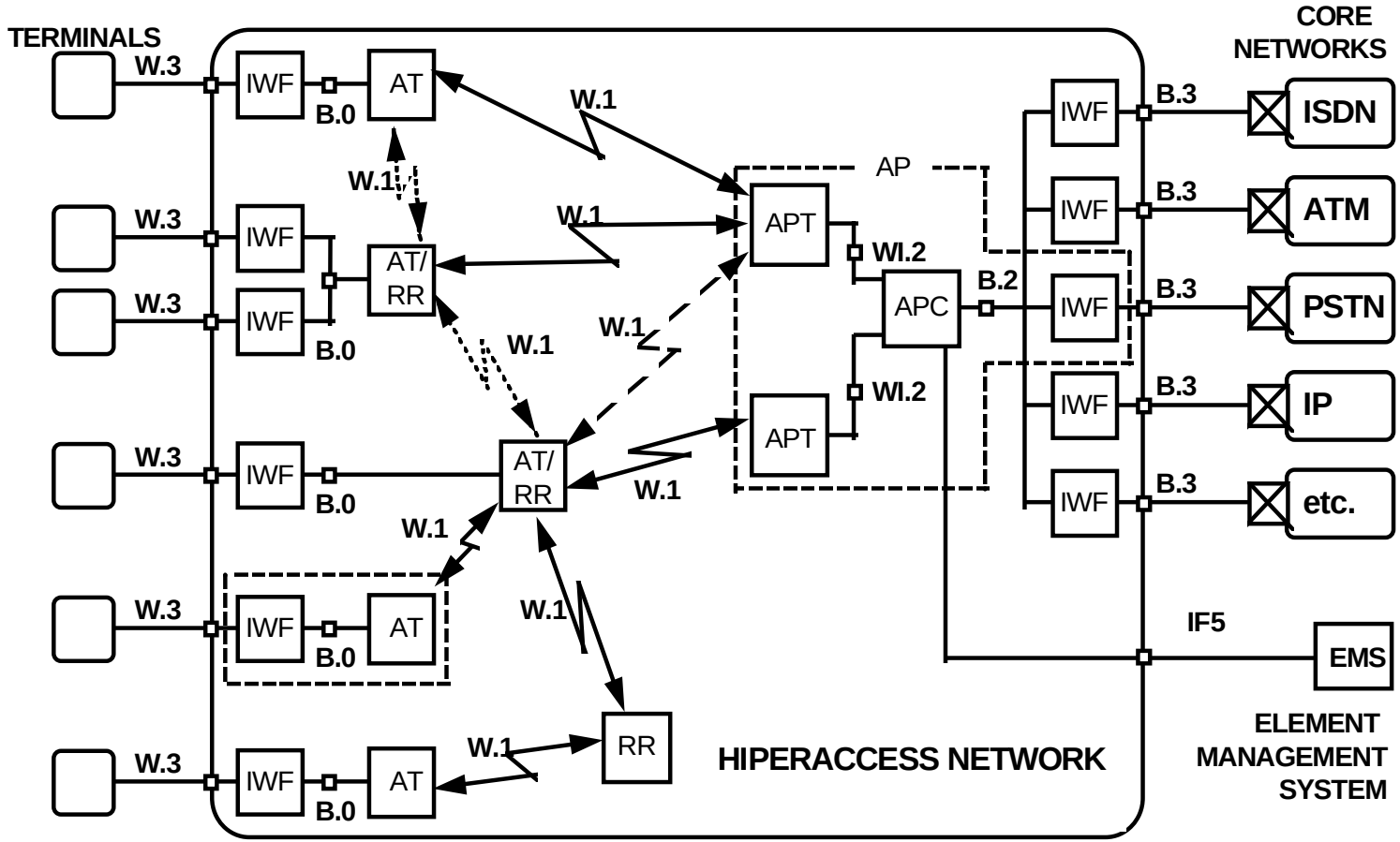

HIPERACCESS network components

- **Access Point Controller**
  - interface to local network via Interworking function
    - V5 for PSTN
    - VB5 for ATM, etc.
  - control the routing of the traffic
  - diverse routing option between AT and local network
  - communicates with a number of APT using P-P links
  - presents the OA&M information from the radio network to the external EMS - Element Management System

HIPERACCESS network components - cont.

- **Access Point Transceiver - APT**
  - provide coverage
- **Access Termination - AT**
  - customer premises
  - supports multiple customer terminals
- **Radio Relay**
  - to extend coverage
  - may support the direct connection of terminals

BRAN General Reference Model

- **Intended to align with:**
  - ITU IMT-2000
  - ETSI UMTS
- **The Repeater is Hiperaccess specific**

General Reference Model - simplified

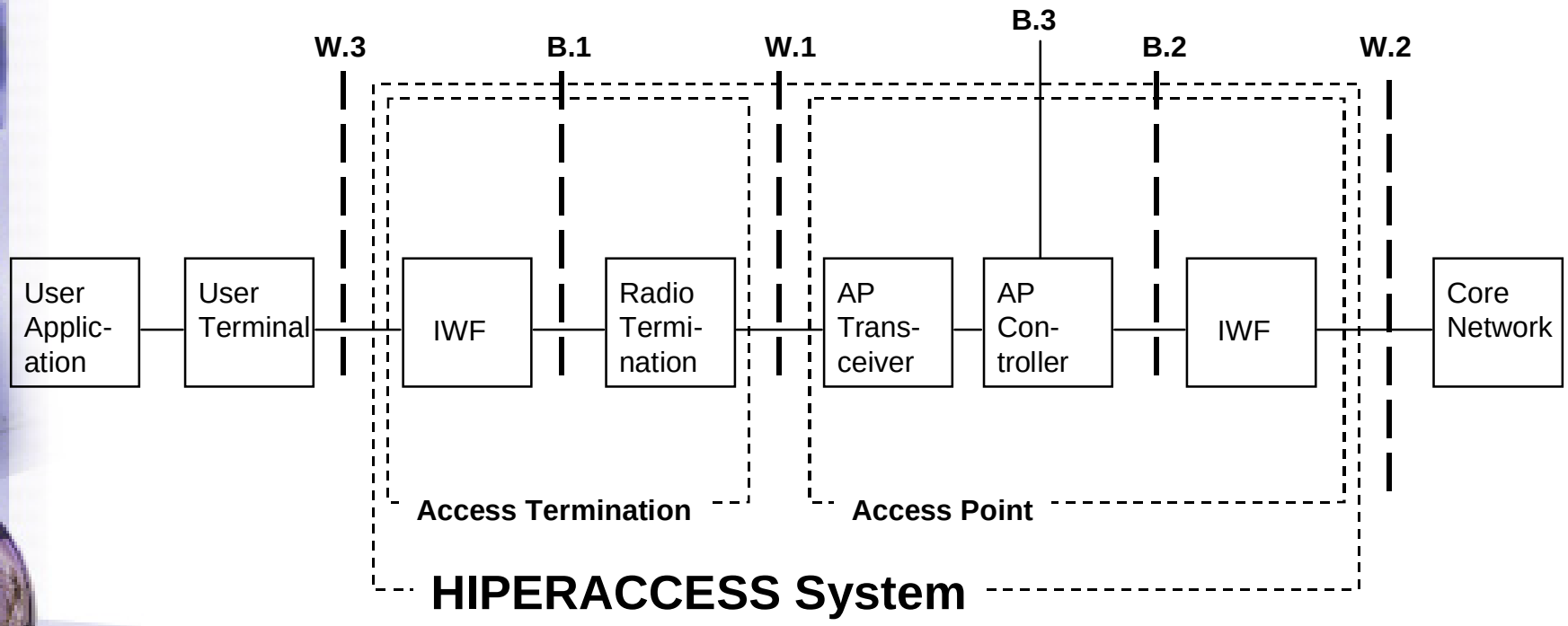

Interface Requirements

- W.1 - Internal air Interface
- W2, W3 - External Interfaces - specified by other bodies
- B1, B2 - Internal Service Interfaces - specified at logical level only
- B3 - management interface to EMS

Requirements for Inter-Operability

- **Specifications for:**
  - PHY layer
  - DLC layer
  - IWF (to supported UNIs and SNIs)
- **Additional aspects**
  - identification and security
  - service management
  - network management

HIPERACCESS GPM - General Protocol Model

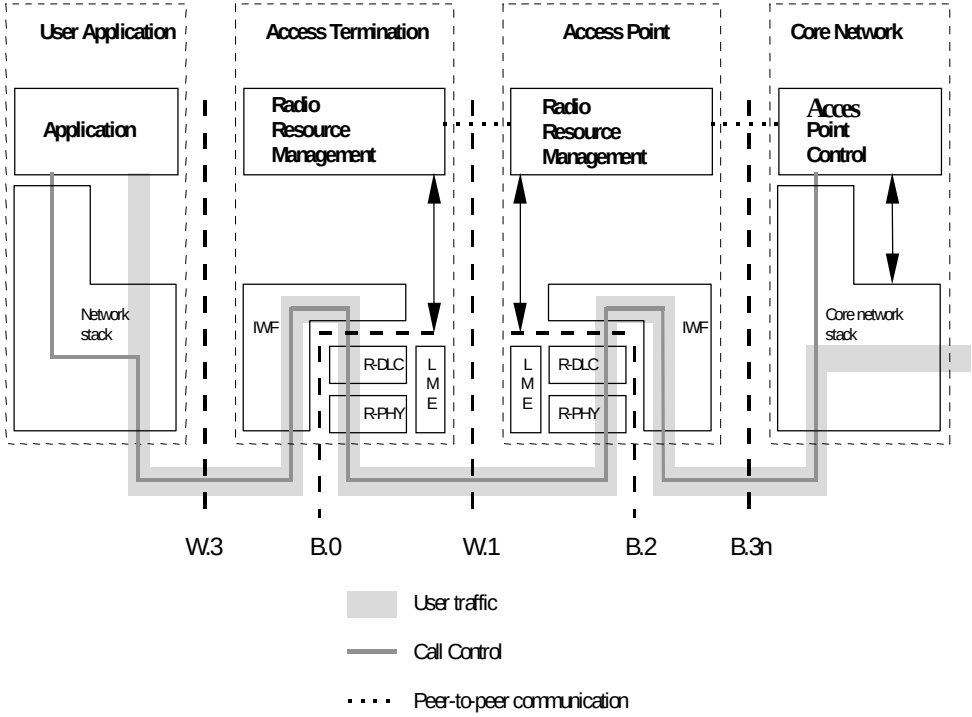

DLC=MAC + LLC
LME=Layer Manag. Entity
IWF=Interworking Function

Protocol Elements

- **Radio DLC = MAC + LLC**
  - MAC (Medium Access Control)
    - Service policy taking into account:
      - QoS
      - Channel Quality etc.
  - LLC (Logical Link Control)
    - FEC
    - ARQ (automate retransmission request)
- **Layer Management Entity - LME**
  - convey traffic contract info to higher connection control functions

GPM in ATM environment

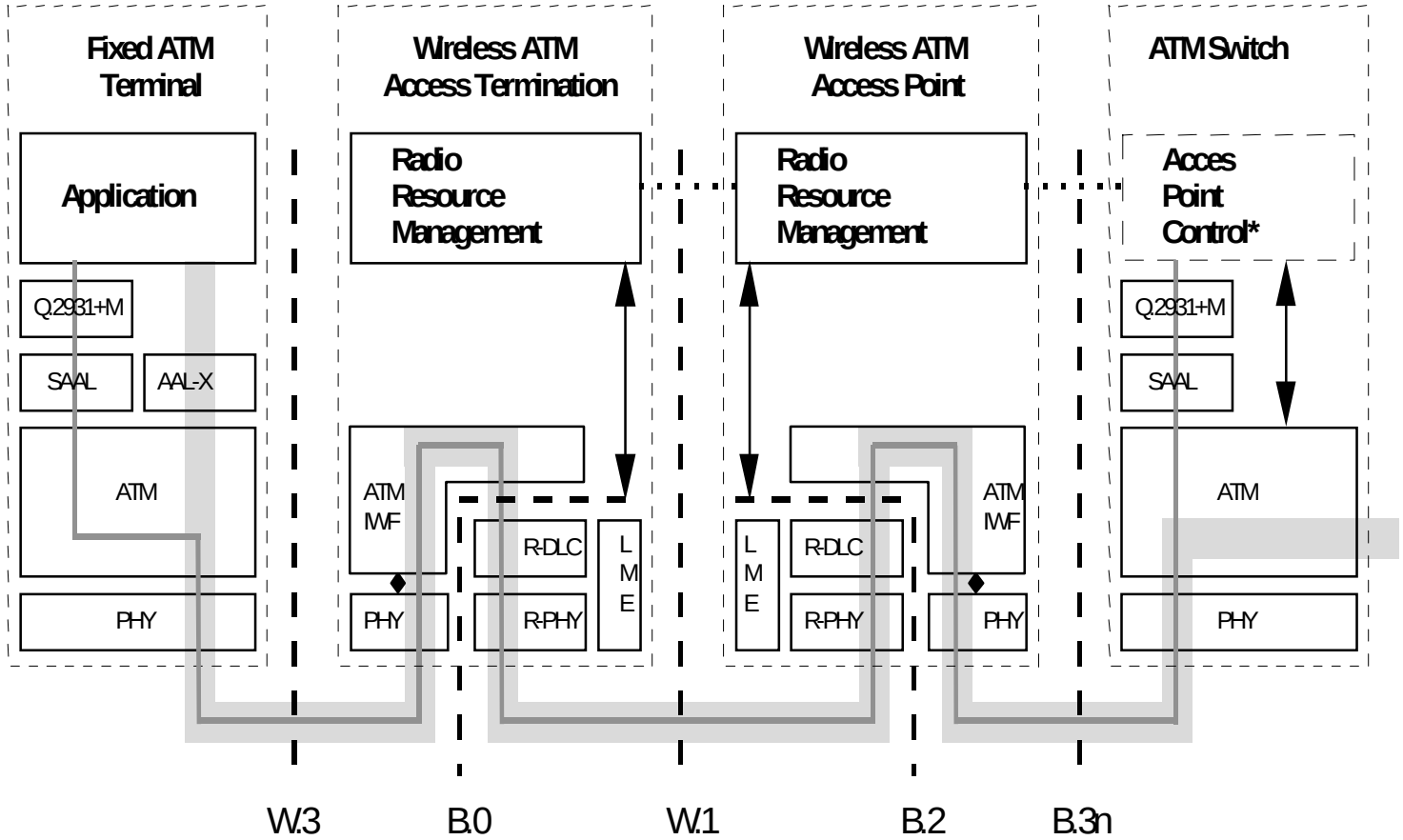

◆ ATM PHY Service Access Point

User traffic

Call Control

Peer-to-peer communication

* May be null if the ATM switch is not mobility-enhanced

GPM with ATM

- **like models used by the Wireless group of the ATM Forum**
- **the ATM payload is transparently transferred (48 bytes)**
- **the ATM header may be substituted**
  - fields that do not change during a connection
  - VCI+VPI may be substituted

GPM in IP environment

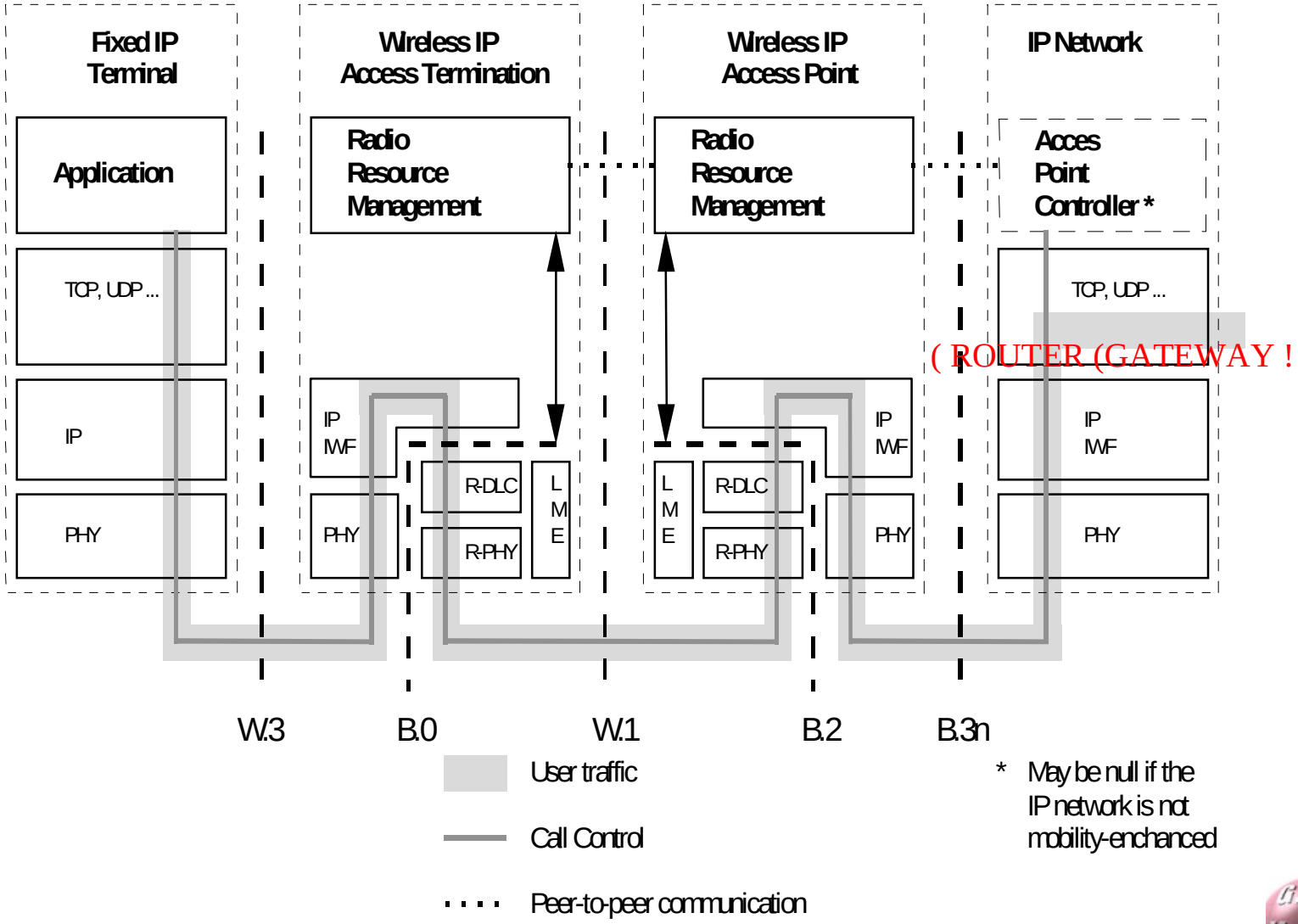

GPM with IP

- **IP may be treated as IP over Ethernet**
  - Ethernet header + CRC should be encapsulated
    - big overhead for short packets (VoIP)
- **IP may be treated as genuine IP**
  - Router functionality should be implemented in IWF
    - ARP - must
    - etc.

IEEE 802.11 SYSTEM ARCHITECTURE

IEEE 802.11 - General

- **Wireless LAN Standard - 1997**
  - Medium Access Control (MAC)
  - Physical Layer (PHY)
    - FHSS - 2.4GHz ISM
    - DSSS - 2.4GHz ISM
    - IR
- **Working now on High Speed, mainly PHY, for:**
  - 2.4GHz
  - NII - 5.2 - 5.7GHz

IEEE 802.11 - General

- **LAN wireless extension**
- **Stations**
  - Fixed
  - Portable
  - Mobile
- **Network**
  - infrastructure - Access Points
  - ad-hoc
    - spontaneous created
    - stations only

IEEE 802.11 - General

- **Network Architecture**
  - Distributed
- **Network Control**
  - NOT included in the standard
- **Address Space**
  - IEEE 802 48 bit
- **Network and user interfaces**
  - NOT defined
  - PORTAL logical interface points only

Extended Service Set + Basic Service Set

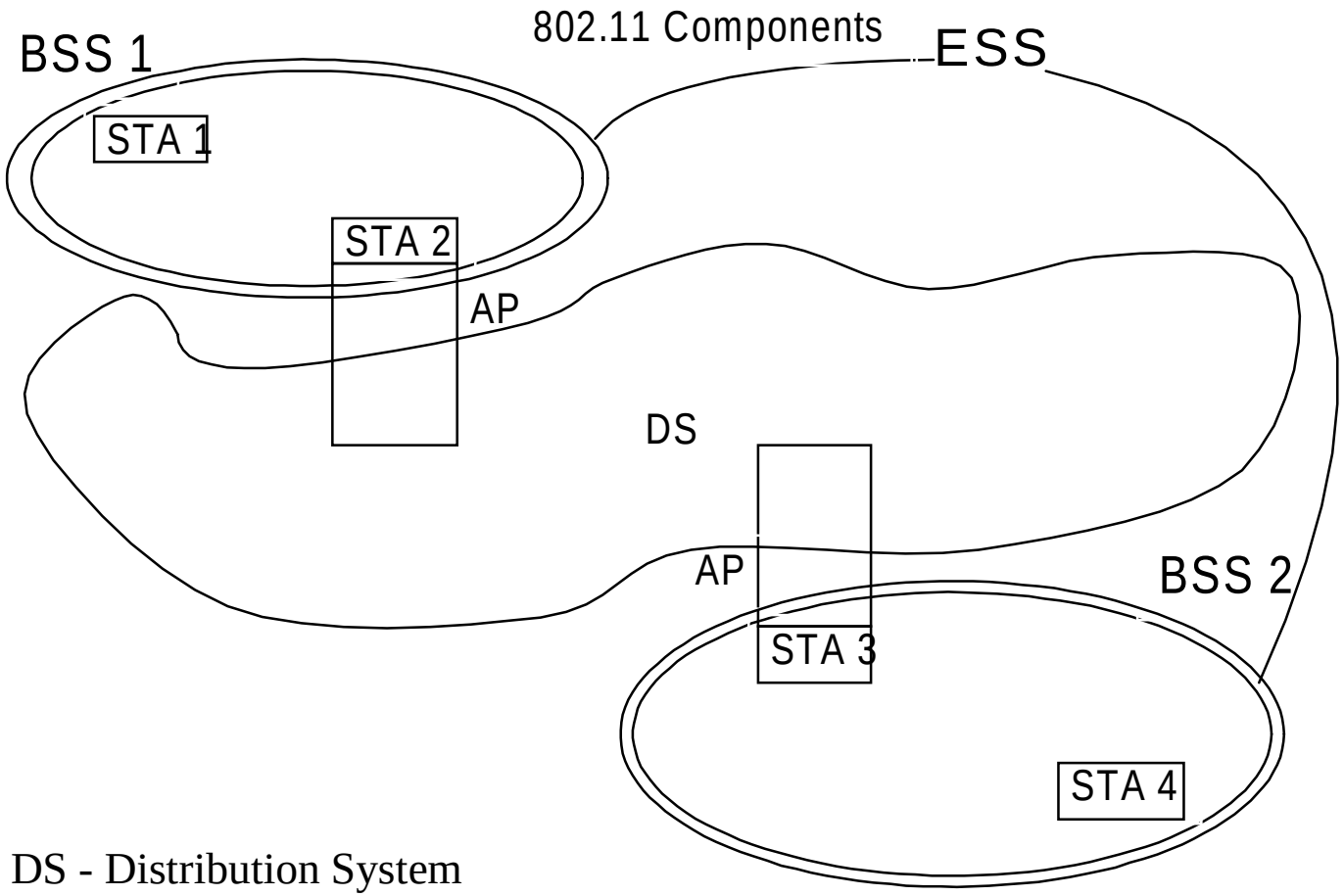

DS - Distribution System

* The Relay can be made with STA+ AP combination

Architecture components

- **BSS - Basic Service Set**
  - AP - Access Point
  - STA - Station
- **ESS - Extended Service Set**
  - Stations with the same ESS-ID may communicate

Logic Service Interfaces

- **802.11 does not explicitly specifies interfaces!**
- **Instead, specifies services:**
  - Authentication and deauthentication
  - Association, reassociation and disassociation
  - Distribution
  - Integration (WLAN -> LAN)
  - Privacy
  - MSDU delivery

Reference Model

:ONLY TWO LAYERS ARE DEFINED

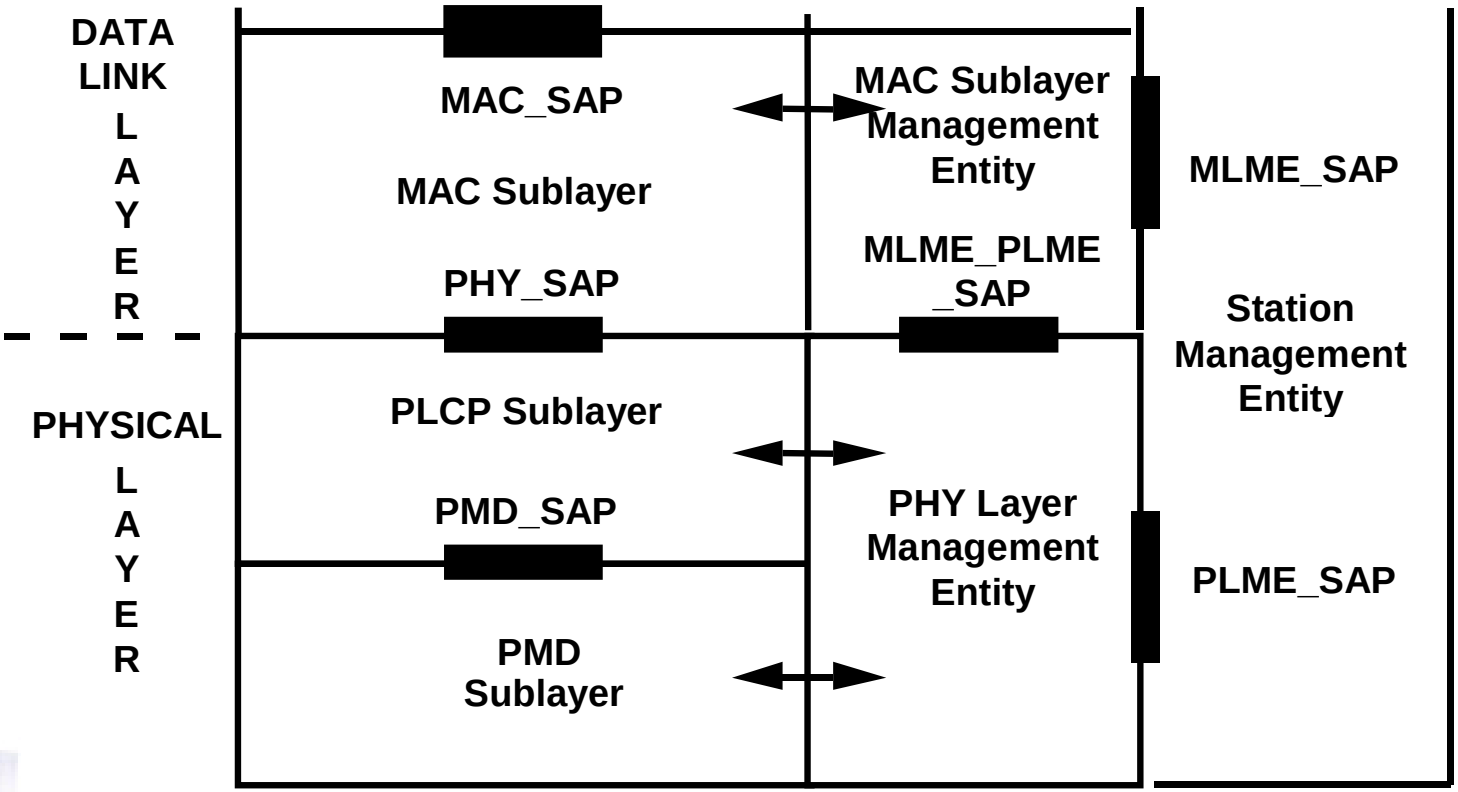

IP over 802.11

- **802.11 is protocol independent**
- **Naturally, the portal function will talk with Ethernet Interfaces**
  - address fields are translated, not encapsulated
  - CRC is recalculated
    - minimum overhead for short (VoIP) packets
- **Repeaters are implemented as a combination of STA and AP with baseband connection**
  - STA should support bridging capability

BRAN HIPERACCESS vs. IEEE 802.11

BRAN-HA SYSTEM

ATM Multiplexor should be inserted

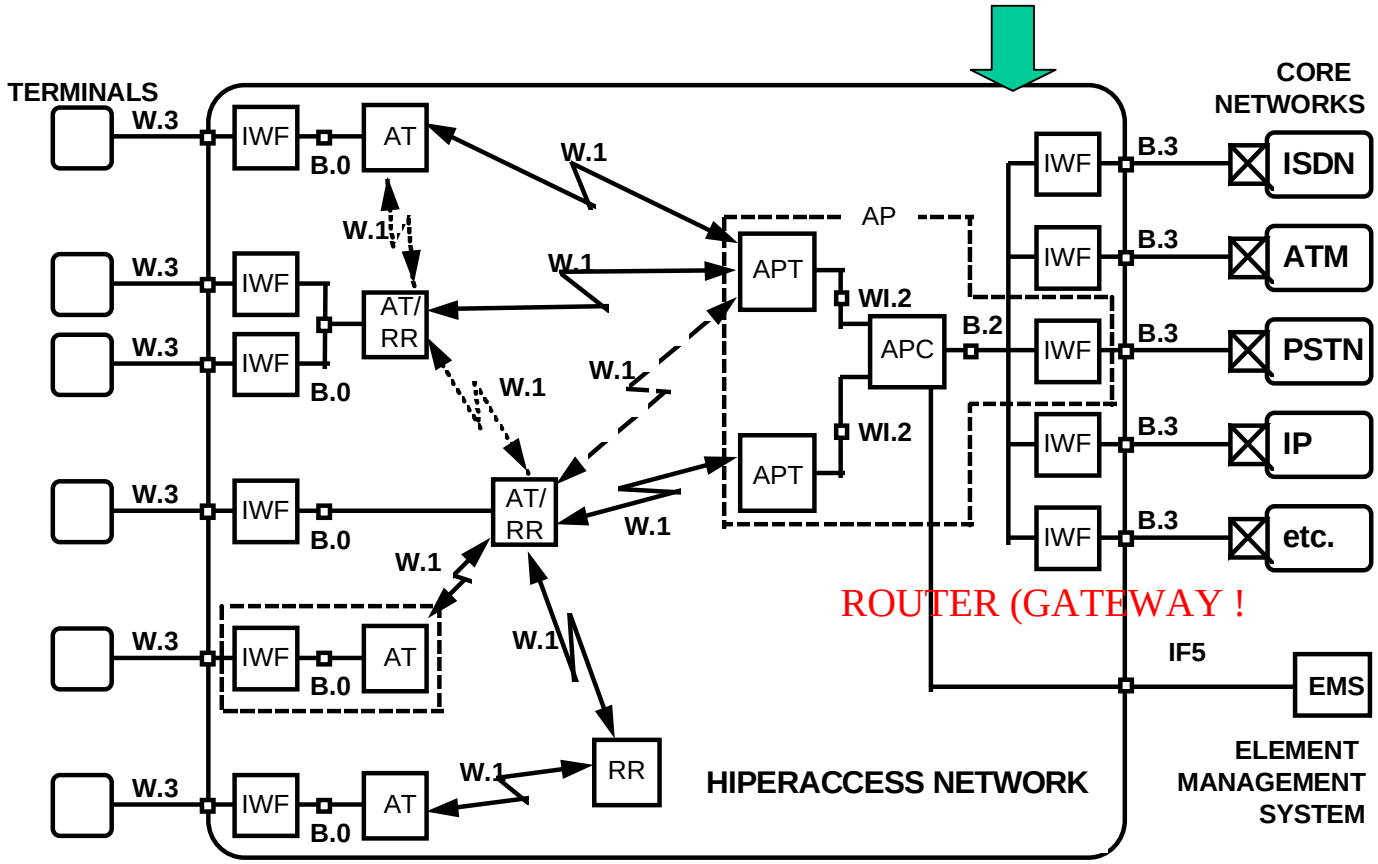

Supported Services at Service Node Interface

- **PSTN Service**
  - V5.x VB5
- **N-ISDN**
  - V5.x VB5
- **B-ISDN, ATM**
  - VB5
  - ATMF NNI (Q.2140/4)
  - FDDI (ISO 8802.5)
- **UMTS**
- **IP**
  - V5
  - VB5
  - ATMF NNI (Q.2140/4)
  - FDDI (ISO 8802.5)
  - UMTS

Supported Services at User Network Interface

- **PSTN**
  - POTS (national standards)
- **N-ISDN**
  - ISDN BRA (I.430)
  - ISDN PRA/2048 kbit/s (I.431)
- **B-ISDN, ATM**
  - B-ISDN/2048 (I.432)
  - ATM UNI 4.0, UNI 3.1 (ATMF/RBB i/f)
  - Ethernet (ISO 8802.3) on 10base-T and 100baseTX
  - DAVIC A0
- **IP**
  - Ethernet (ISO 8802.3) on 10baseT and 100baseTX
  - IEEE 1394 and USBATM UNI 4.0 (AAL5 UBR)
  - DAVIC A0

BRAN-HA: Interfaces and Services - Conclusion

- **Most of the existing interfaces can be connected to the system**
- **Low delay will be provided for full transparency**
- **Partial / full E1, T1 (CAS, MFC-R2) not included, despite that 99% of user equipment is connected to WAN or PSTN using them**
- **Access Point Controller and Access Termination**
  - Under IWF+ Radio Resource Control - should include a Router / GW / CO switch (except ATM) for all the enumerated interfaces
  - When more than 1 interface is provided
    - Should include an ATM switch after the IWF

IEEE 802.11 System Network Integration

- **Should be created using LAN at Base Station and IP**
- **Build the LEGO with “off the shelf” components**
  - BWA system cost will be lower
- **The LEGO units need no development effort**
  - time-to-market much lower
- **Not only big producers can develop the BWA equipment**
  - the competition will be stimulated in the BWA market
  - BWA equipment cost will drop
- **Switching**
  - use low cost Ethernet switch
- **Security**
  - use VLAN

802.11 based system - Base Station

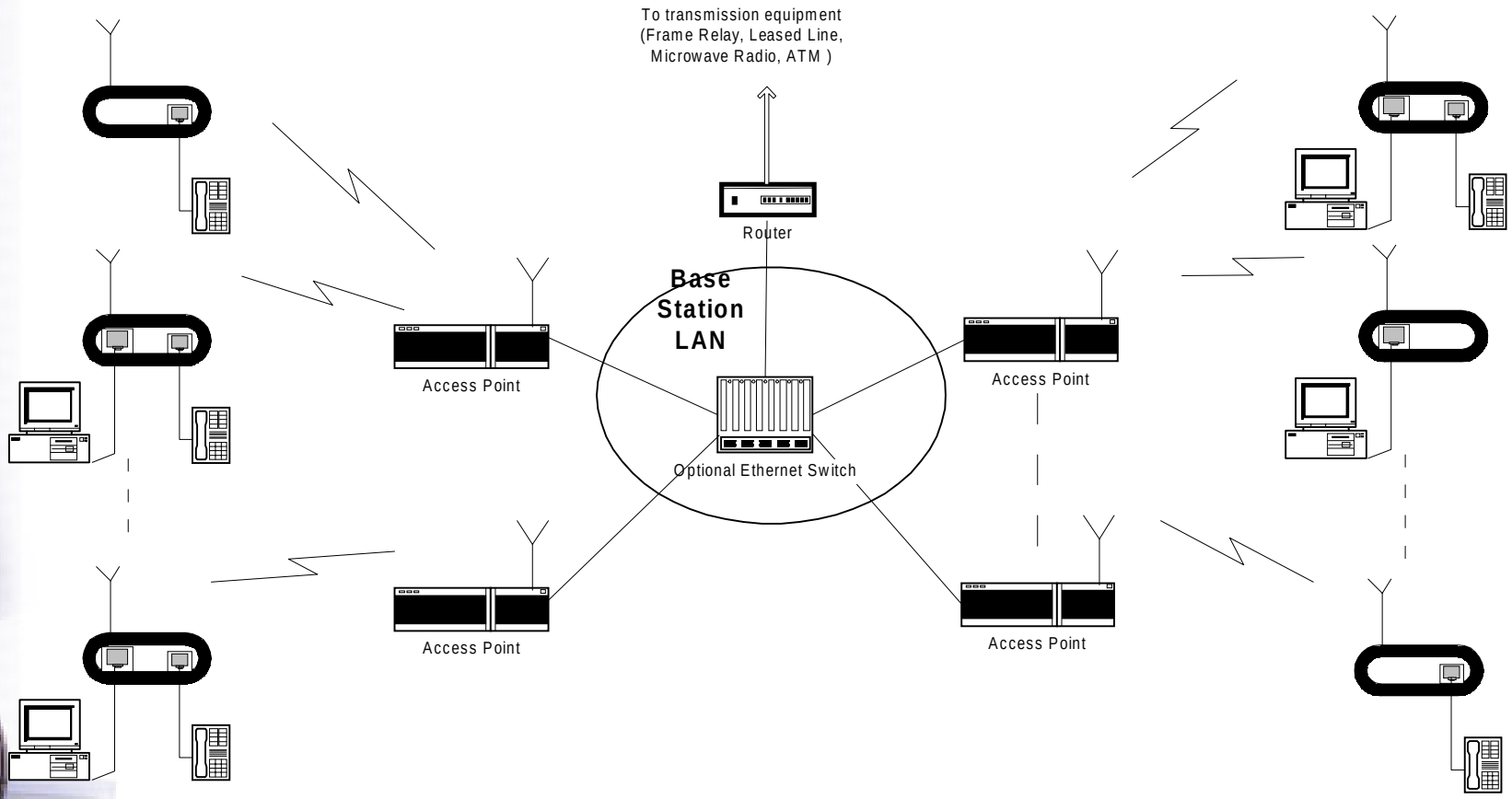

Base Station Architecture

802.11 based system - Network Interfaces

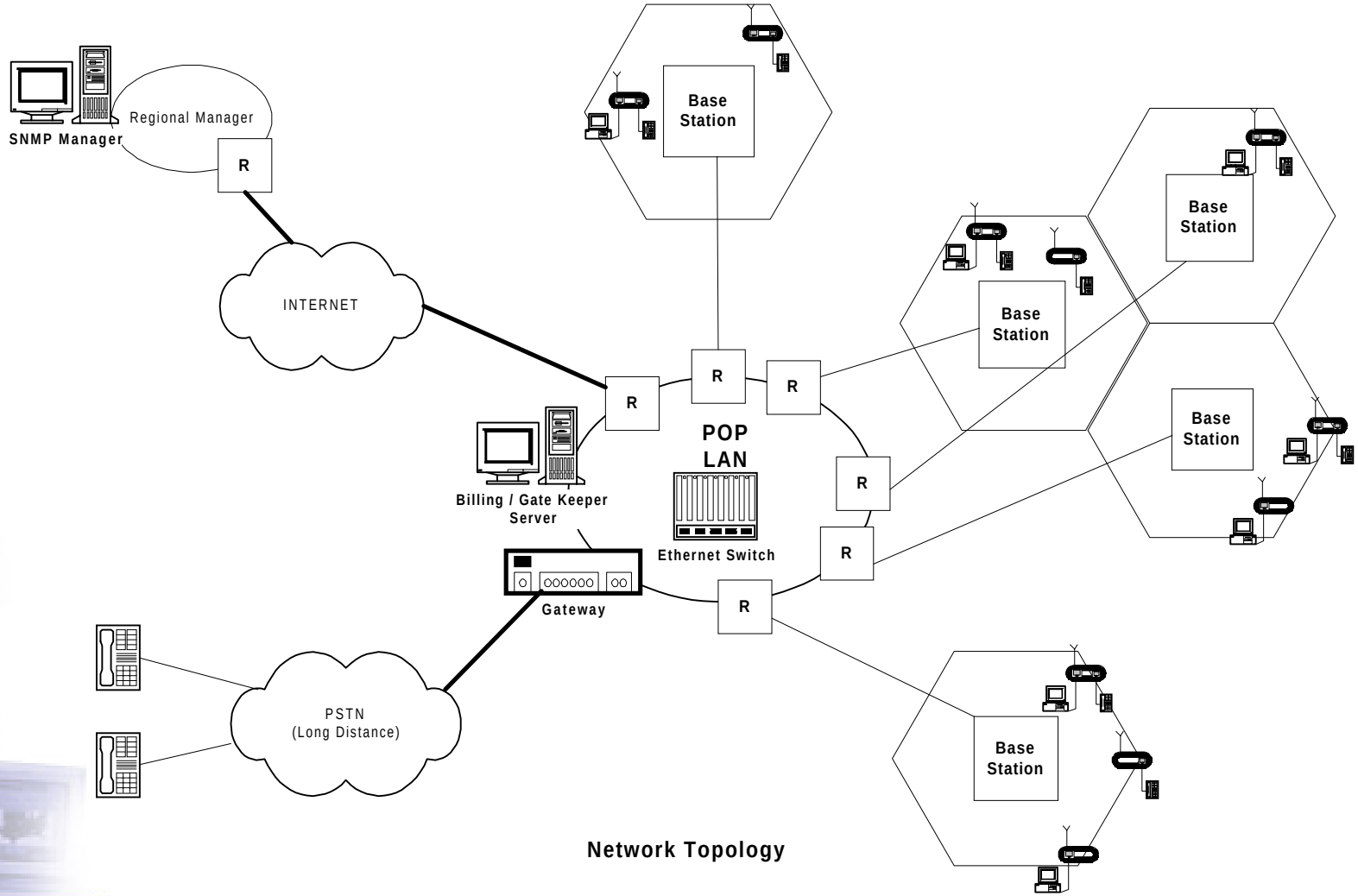

Network Topology

IP network services

- **Video/Telephony: ITU-T H.323 Voice/Video GW**
  - Interfaces:
    - E1, T1 CAS
    - E1 MFC R2
    - ISDN PRI
    - V5 - coming up
    - analog FXO / FXS
  - A lot of producers for Internet Video/Telephony
- **FAX**
  - ITU-T V.38
  - Supported by H.323 Gateways

Network architectures

- **The Routers provide all the WAN interfaces, including ATM**
- **The Network can be built:**
  - Level 2 only
    - Ethernet over ATM
    - Ethernet over Frame Relay
  - IP level
  - VLAN support
    - VCI to VLAN address
    - IP subnet to VLAN address

IP network QoS

- **the use on local LAN / NETWORK will increase the QoS**
- **the methods used in IP network**
  - priority (IP header)
  - RSVP - Resource Reservation Protocol

IEEE 802.11 QoS

- **Time Bounded Services**
  - using the Point Coordination Function
  - basically polling mechanism
  - should be applied for voice and video transmission
  - H.323 voice / video
    - the delay is not critical
      - the jitter can be avoided
    - 60-90 ms compression frame can be used

Spectrum Efficiency for voice services

- **BRAN-HL**
  - Voice transmission - transparent, low delay
    - V5 and ISDN transmit only PCM voice
    - Voice channel rate: 2 * 64kb/s
    - at 3bit/s/Hz: 16 voice channels
  - VoIP
    - G.723 - 6.3kb/s, 24bytes
    - G.729 - 8kb/s, 10 bytes
    - add 5 bytes IP overhead
      - 29 bytes, 15 bytes
    - send minimum 48bytes!!!

Spectrum Efficiency for voice services

- **VoIP + 802.11**
  - G.723 voice coder - 6.3kb/s
  - Voice Activity Detection
  - 60ms voice frame
  - 802.11 PCF
    - calculated efficiency at 3bit/s/Hz: 100 voice channels

CONCLUSIONS-1

- **BRAN-HA - centralized system, telecom concept**
  - fine granularity, for minimum delay
  - ATM is transmitted with low overhead
  - IP is transmitted with high overhead
    - to reduce it, Router functions should be implemented
  - high complexity for both AP and AT -> high cost
    - the IWF + Radio Resource Management should implement Router, CO call control functions
    - the APC should implement an ATM switch
  - only V5.X compatible interfaces for PSTN

Throughput Comparison for different payloads - BRAN-HL

BRAN HL

I

Protocols	Flexible*	*54-bytes**	*60-bytes***	72-bytes*
TCP/IP/Ethernet	97 %	*82 %*	*86 %*	89 %
TCP/IP	94 %	*88 %*	*86 %*	85 %

*: Assumes 16QAM, R = 3/4 for 54 (72)-byte SDU,
**: Assumes 16QAM, R = 5/6 for 60-byte SDU

Source: NTT, Yoichi MATSUMOTO

CONCLUSIONS-2

- **802.11 - distributed system**
  - “SIMPLE” RADIO SYSTEM
  - all the Network Interfaces and Services can be provided using appropriate GW / Routers
  - low cost - market competition
  - IP optimized
  - flexible architecture support with wireless bridges
  - QoS: at IP level and at 802.11 MAC level
  - higher delay
  - very high spectrum efficiency with VoIP
  - intrinsic support of wireless relaying - level 2 Ethernet Bridge
  - intrinsic support of mash topology - level 2 Ethernet Bridge

CONCLUSION-3

- **Access vs. LAN**
  - Protocol design for high frequency reuse in TDD systems
  - Protocol design for FDD operation
- **Both HL-BRAN and 802.11 can be adapted**

Working Assumptions for IEEE + BRAN LMDS System

- **Distributed concept, IEEE like**
- **User interfaces - wide choice, BRAN like**
- **Only one Interworking function for network interfaces**
  - IP over Ethernet
- **User interfaces**
  - for business applications
  - for home applications
- **Standardization scope:**
  - only PHY + MAC
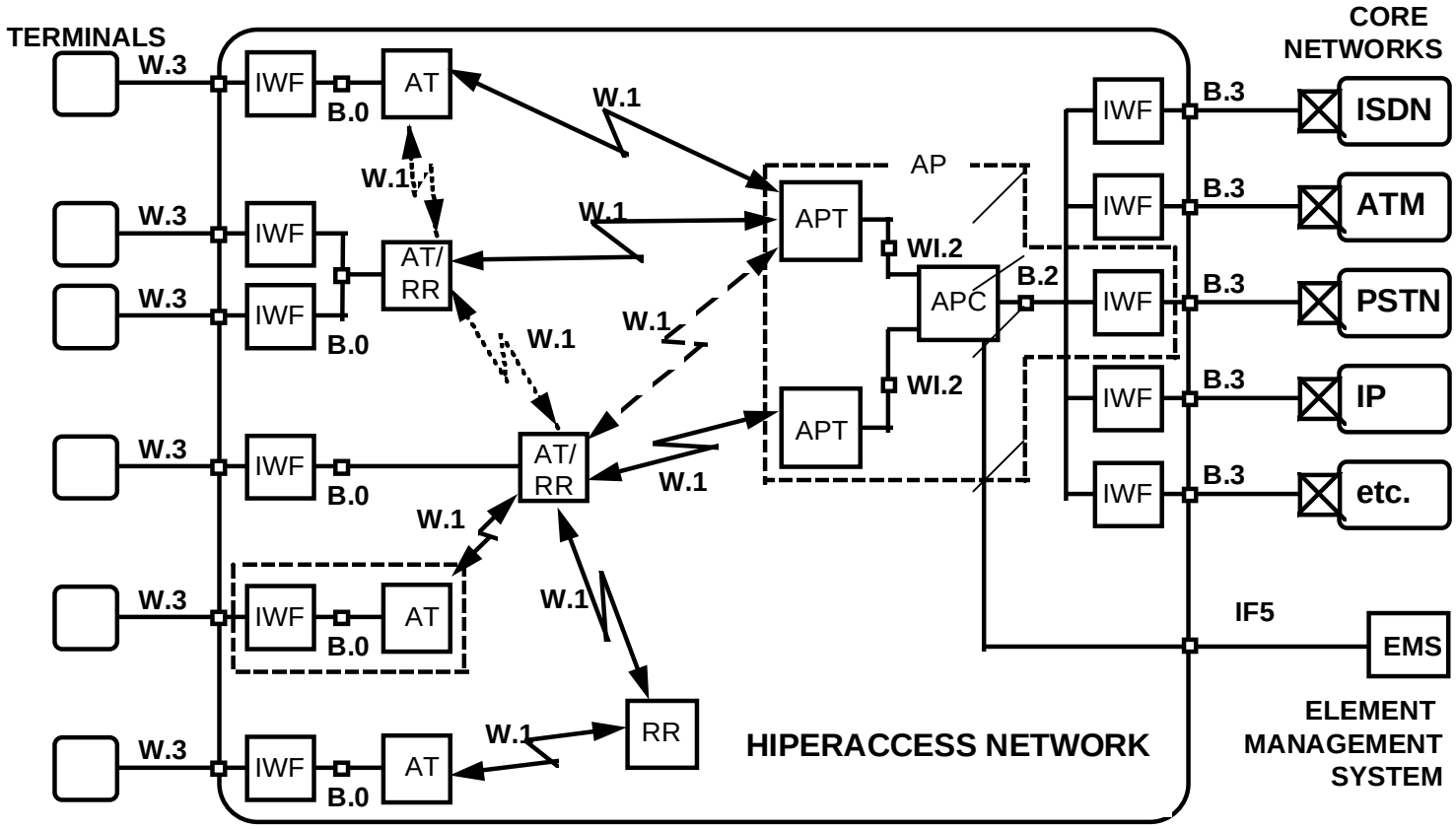
Architecture