Local Multipoint Distribution Service Tutorial

1999 IEEE Emerging Technologies Symposium on

Wireless Communications and Systems

Presented by

Leland Langston, Raytheon

Dr. Roger Marks, NIST

Eli Reese, TriQuint

12 April 1999

Dallas, Texas

Raytheon

Tutorial Agenda

- 09:00 LMDS Applications and the Regulatory Environment
  - » Leland Langston Raytheon Telecommunications
- 09:20 Standards for Broadband Wireless Systems
  - » Dr. Roger Marks National Institute for Standards and Technology
- 09:50 LMDS Systems -- Part I
  - » Leland Langston
- 10:15 Break
- 10:30 Systems -- Part II
  - » Leland Langston
- 11:15 GaAs MMIC Technology for LMDS
  - » Eli Reese TriQuint Semiconductor
- 11:45 Other Broadband Wireless Systems and Summary
  - » Leland Langston

What is LMDS ?

- **L**ocal **M**ultipoint **D**istribution **S**ervice

- In 1998, the FCC auctioned 1.3 GHz of spectrum between 27.5 and 31.3 GHz to be used for the local distribution of video, voice and data services with few constraints on use.

- Other frequencies (e.g., 38 GHz) are also used for similar services. Other terms (e.g. LMCS in Canada) are sometimes used.

LMDS Applications

- Interconnect Private Networks
  - Voice
  - Data
  - Video
- Connect Users to ISP Facilities
- Link Small Offices/Home Offices to Corporate Networks or Internet Services
- Distance Learning
- Telemedicine
- Extension of Public Networks
- Alternative to Wired Networks

Wireless vs.. Wired Broadband Systems

Wireless Advantages

- Low fixed costs
- Time to market: days vs. months
- Focus deployment on best opportunities
- Winning cost profile in urban and rural markets
- Speed allows entry into new markets
- Unregulated at state & local levels
- 80% of cost is electronics (not labor & structural materials)

Wireless Disadvantages

- Line-of-sight (coverage <100%)
- Weather affects availability
- Aesthetics of customer antenna, community base stations & towers
- MMW technology is relatively new to commercial applications.
- Lack of standards.

LMDS System Concept Block Diagram

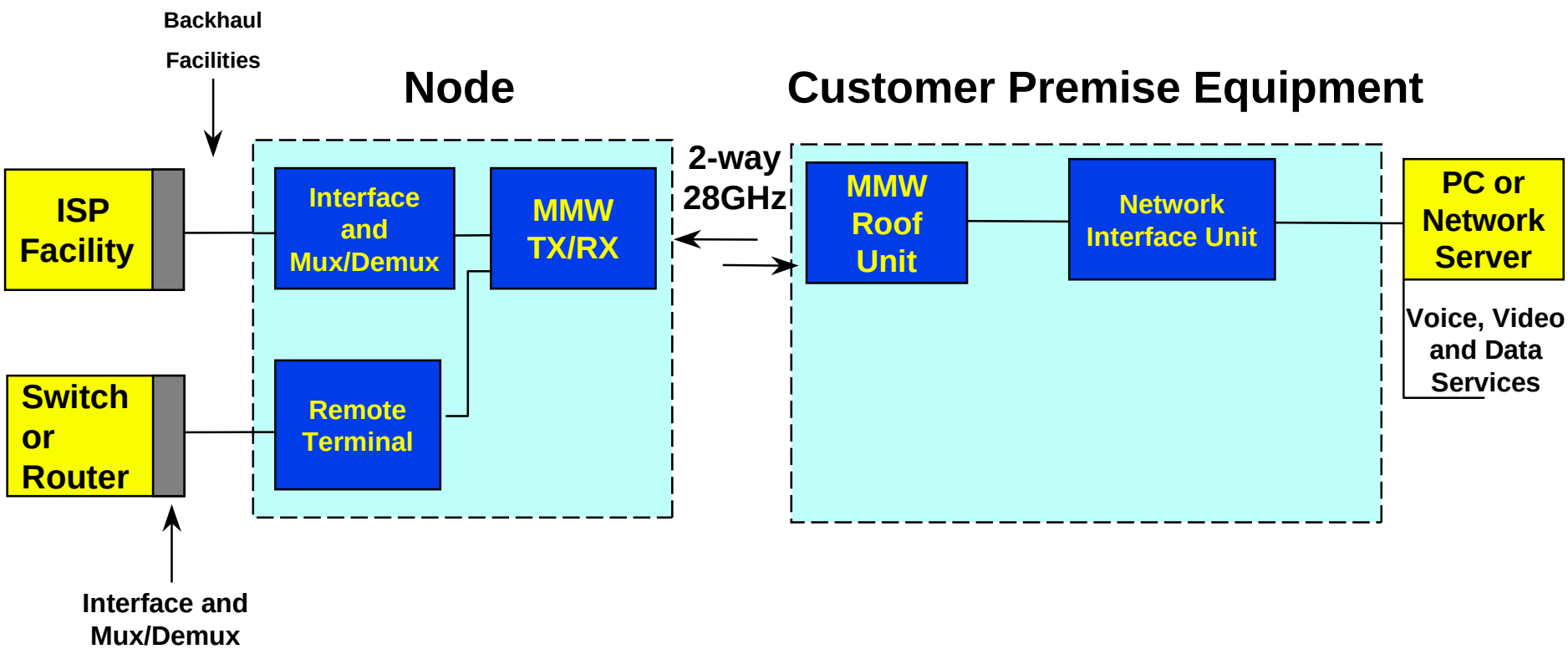

Raytheon

Proposed LMDS Bandplans

FCC Allocation for LMDS

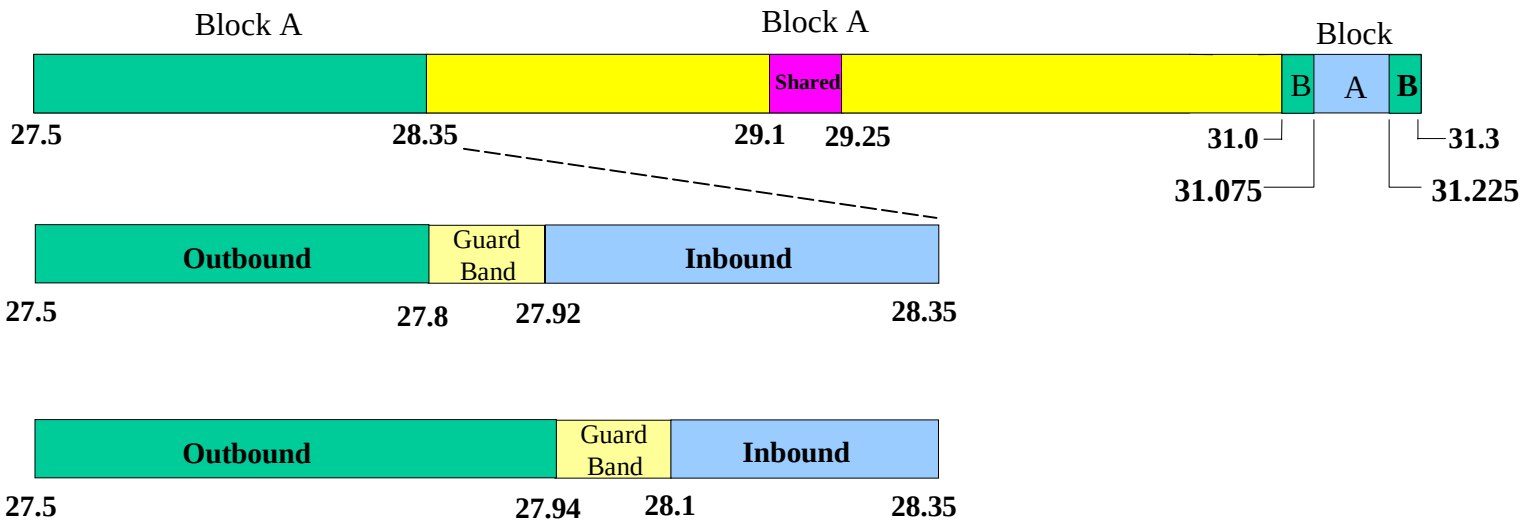

Note: Frequencies in GHz

Raytheon

Various IF Bandplans

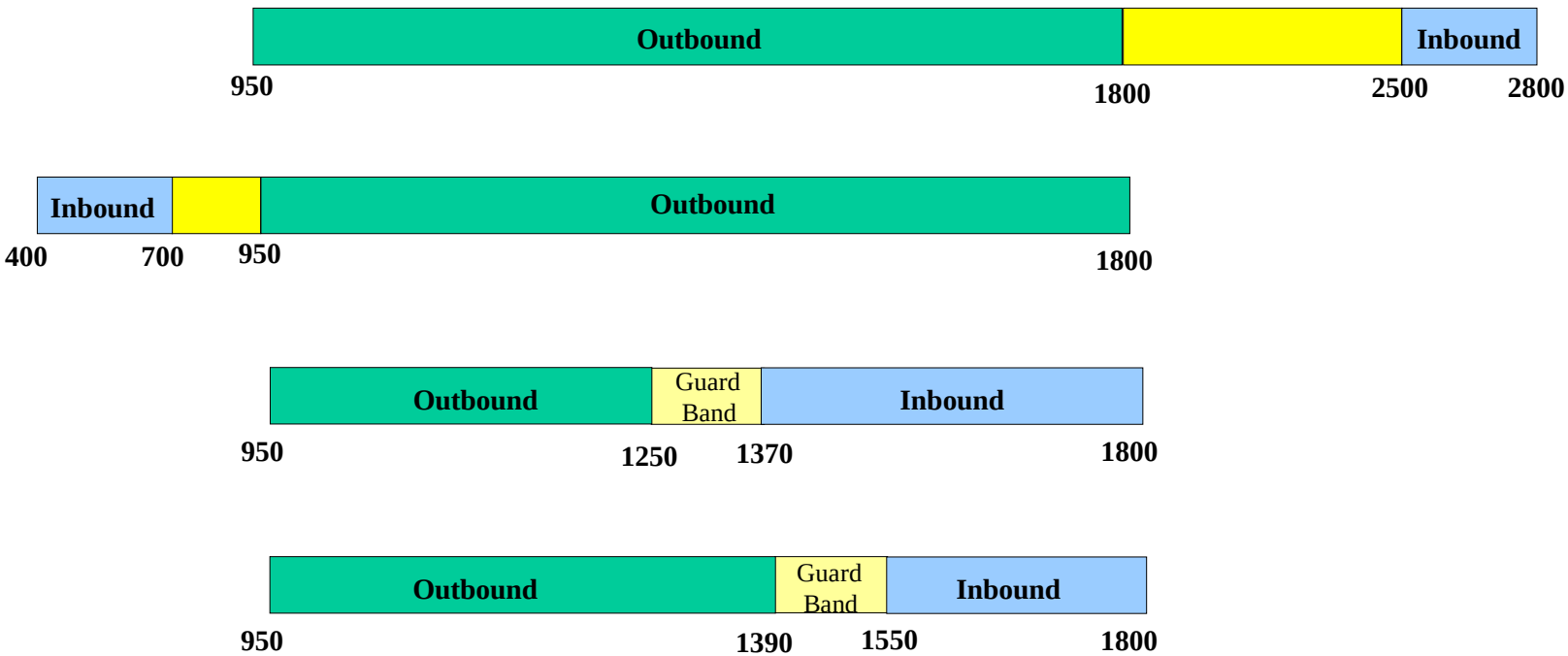

Note: Frequencies in MHz

Raytheon

Other Frequency Bands for Multipoint Systems

US, 24 GHz

International, Korea, 26 GHz

International, Germany, 26 GHz

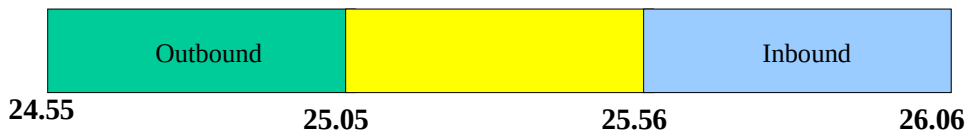

Note: Frequencies in GHz

Raytheon

Standards for Broadband Wireless Systems

Presented by

Dr. Roger Marks

National Institute for Standards and Technology

Raytheon

The IEEE 802.16 Working Group on

Broadband Wireless Access Standards

Roger B. Marks, 802.16 Chair
National Wireless Electronic Systems Testbed
National Institute of Standards and Technology

Distinguished Microwave Lecturer
IEEE Microwave Theory and Techniques Society

N-WEST

Wireless Standards in the United States

- FCC no longer regulates standards for wireless communications (spectrum auctions since 1994)
- no coordinated U.S. approach to wireless standardization
- standardization in newly-auctioned spectrum is slow
- multiple standards continue indefinitely
- equipment costs remain high
- for new services, licensees and vendors may hesitate
- EU is aggressively forging new standards

N-WEST is:

- a project of NIST and the National Telecommunications & Information Administration (NTIA)
- an experiment in how the U.S. Department of Commerce can promote the commercialization of new wireless frontiers
- a pro-active effort to accelerate development of the broadband wireless industry by encouraging voluntary standards
- a new way of doing business: applying NIST measurements to help forge industry consensus standards and specifications
- a measurement testbed at the Boulder Labs of NIST & NTIA
- closely tied to industry (advice, equipment, personnel, . . .)
- on the Web at http://nwest.nist.gov

N-WEST Philosophy

Goal:

Accelerated Commercialization of Broadband Wireless Access Systems

Mechanism:

- equipment cost reduction (esp. at customer end)
  - mass production
    - standardization
      - voluntary industry standards bodies (IEEE)
        - unbiased measurement support (U.S. Dept. of Commerce: NIST and NTIA)

Broadband Wireless Communications

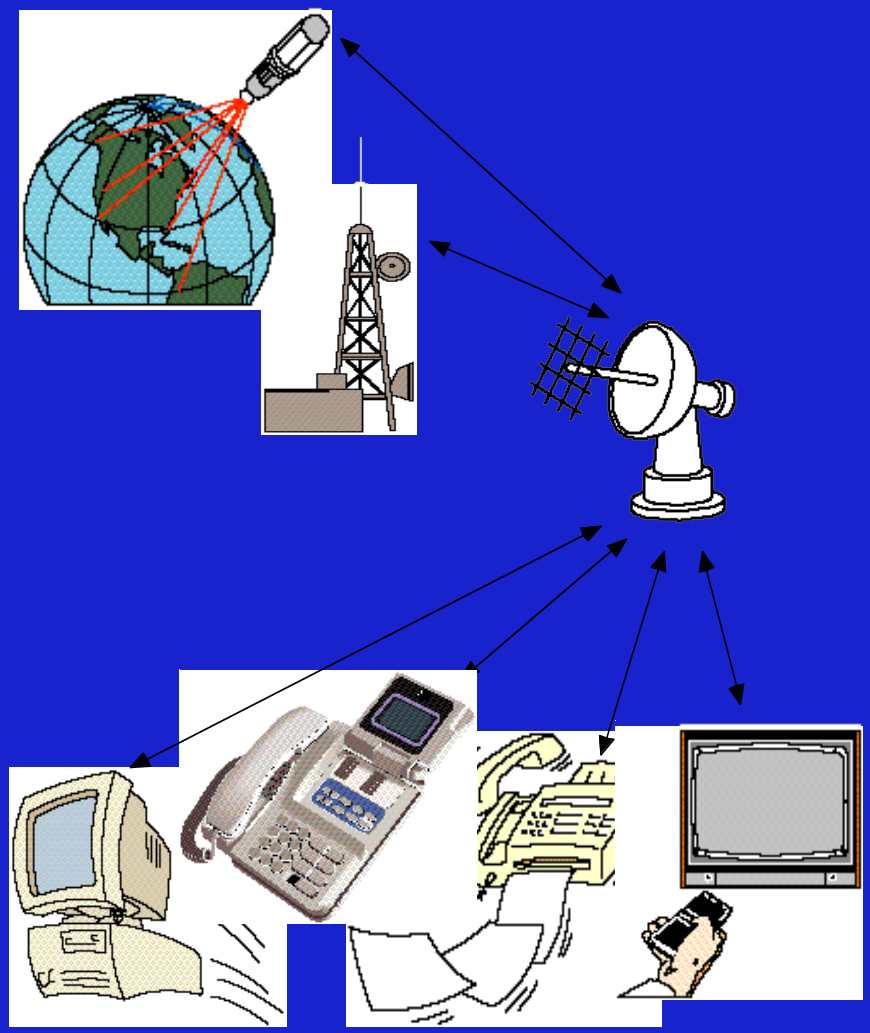

Broadband Wireless Systems

–fixed (non-mobile) customer premises units

–base stations either:
- fixed terrestrial
- in orbit (LEO or GEO satellites)
- in stratosphere (airplanes or blimps)

–broadband data into businesses, homes, etc.
- ATM, TCP/IP, digital video, telephony

–potentially inexpensive and economically competitive with wired broadband

–**The time is right for action:**
- **no standards**
- **spectrum auctions in 1998 and 1999**

LMDS Band Allocation
(Local Multipoint Distribution Service)

28 & 31 GHz Band Plan

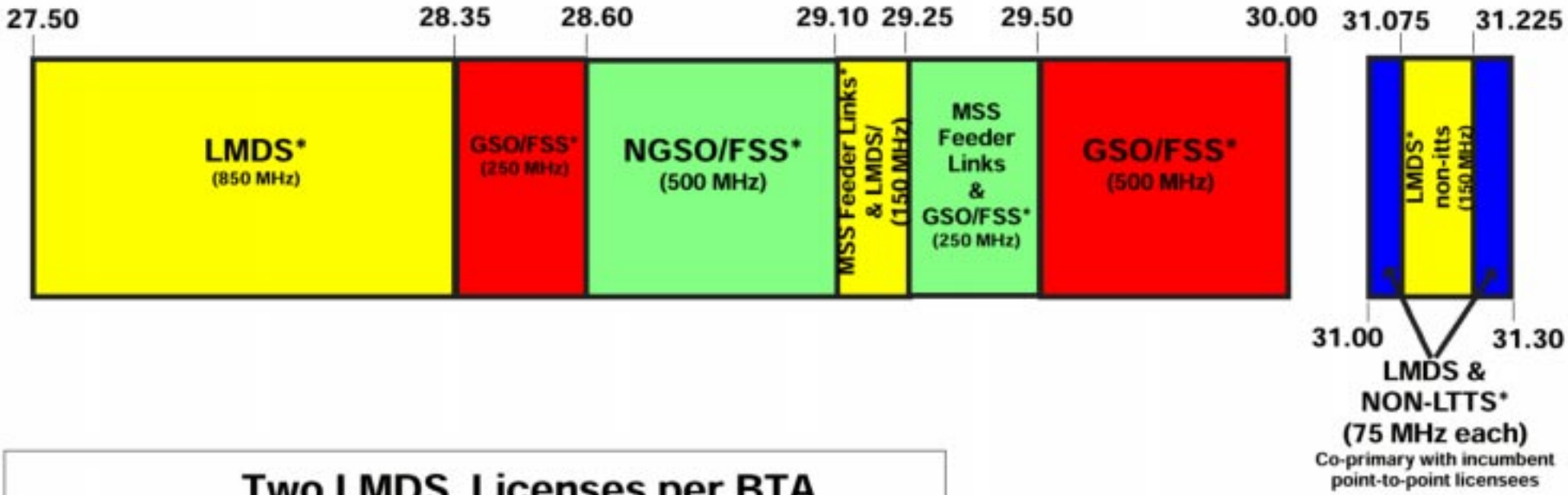

Two LMDS Licenses per BTA

Block A - 1150 MHz:
27,500-28,350 MHz
29,100-29,250 MHz
31,075-31,225 MHz

Block B - 150 MHz:
31,000-31,075 MHz
31,225-31,300 MHz

Legend

"*" - Primary Service
FSS - Fixed Satellite Service
GSO - Geostationary Orbit
NON-LTTS - Non-Local Television Transmission Service
MSS - Mobile Satellite Service
NGSO - Non-Geostationary Orbit

BWA Spectrum Worldwide

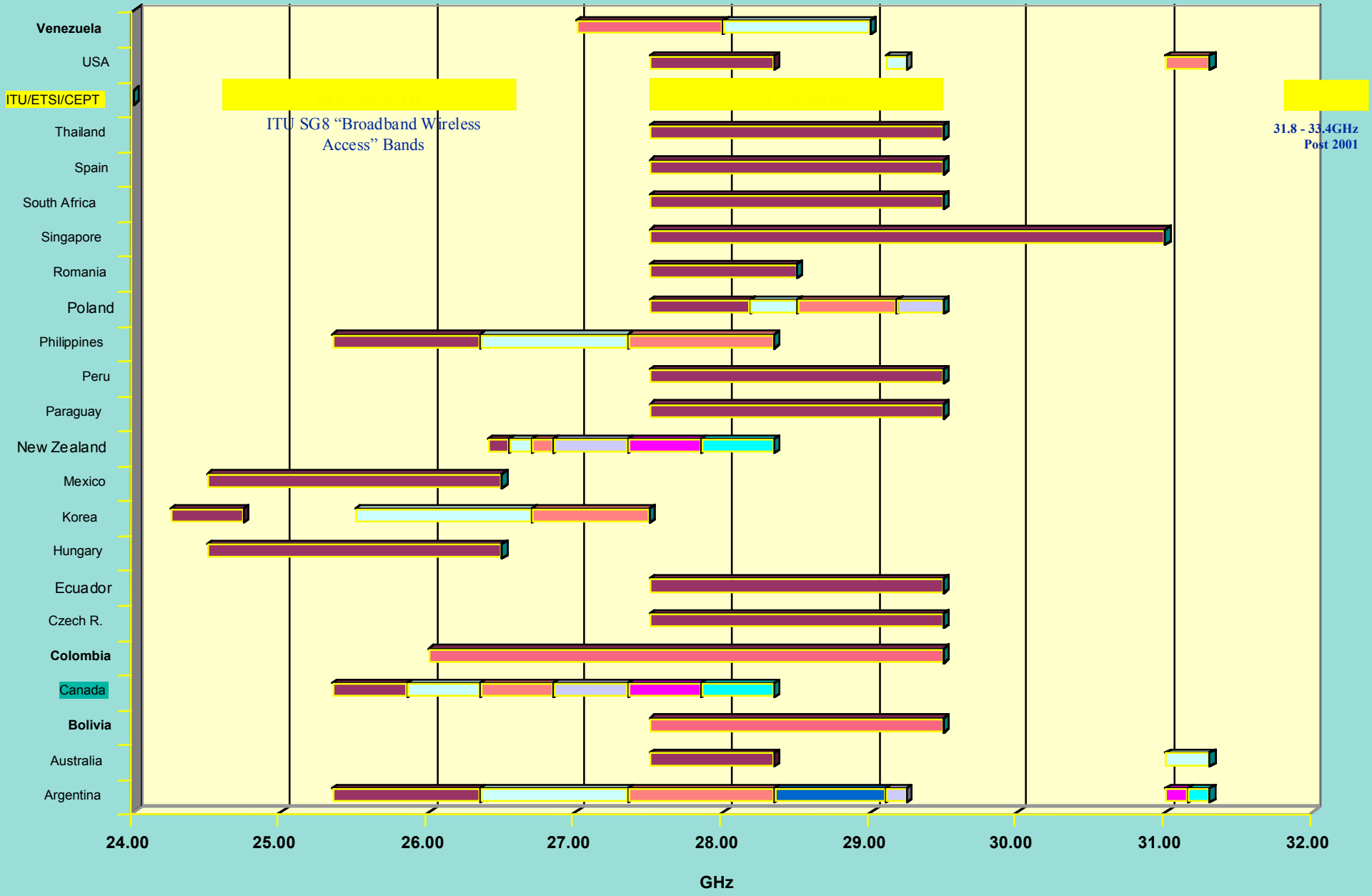

Broadband Subscribers by Technology, US Market, 2003

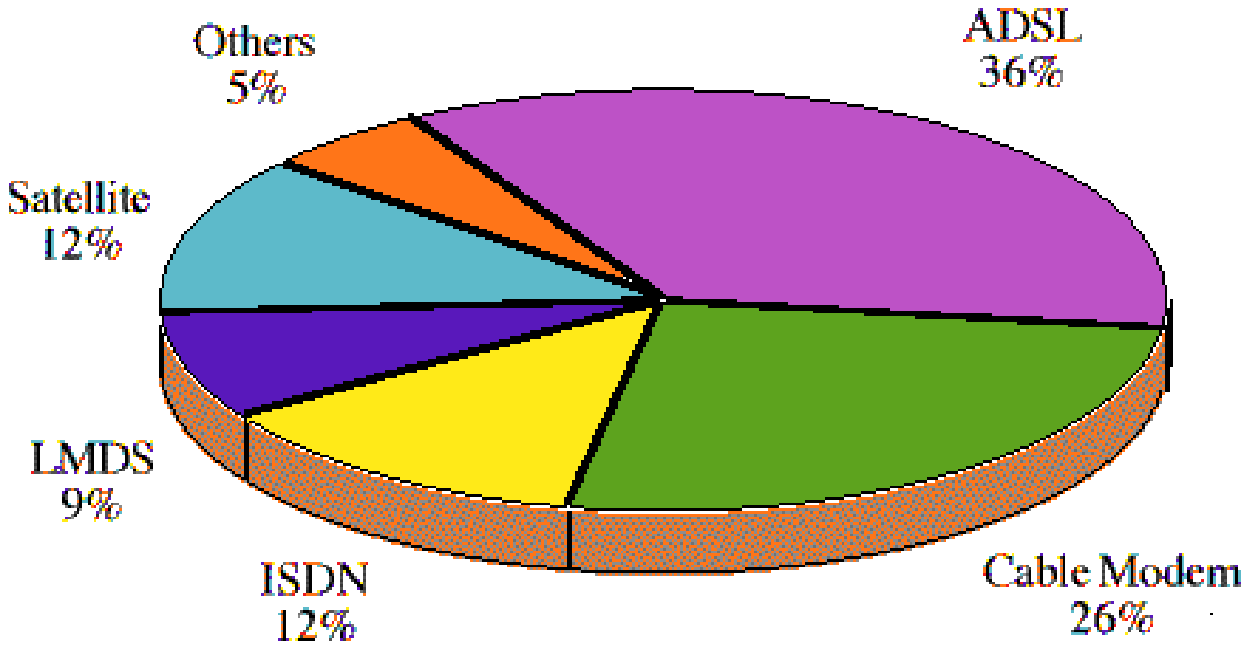

Source: Allied Business Intelligence, Inc.

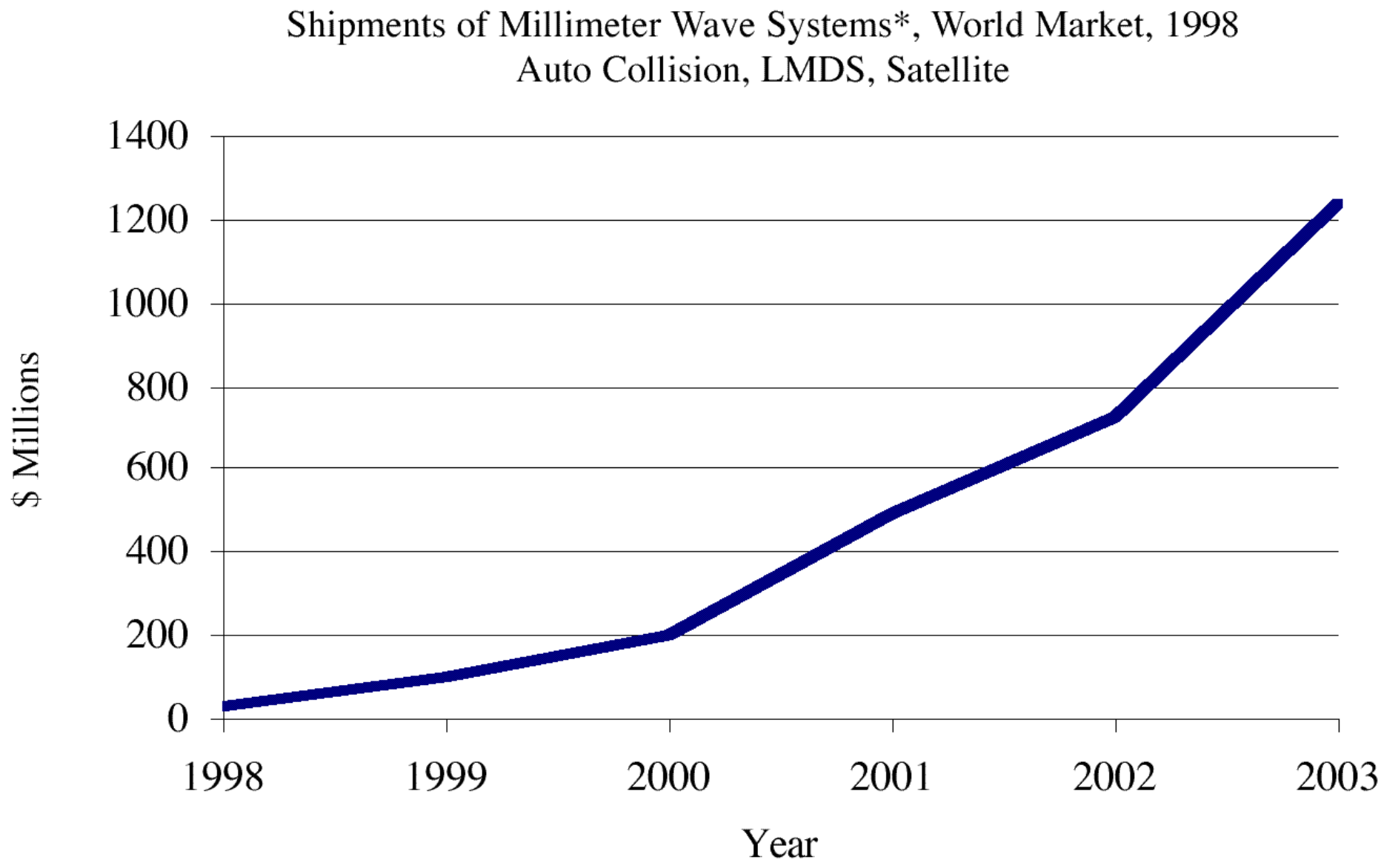

Source: Allied Business Intelligence, Inc.

*Point-to-Point Microwave not included

Business Case for Broadband Wireless Standards

"Subassembly and chip manufacturers simply cannot supply the performance ... at a price which is feasible for significant penetration into the consumer market today."

"LMDS may be closest to achieving this goal, but its *lack of a unified standard and lack of commitment to significant volumes will inhibit further price declines*."

- "Millimeter Wave 1998: Broadband Wireless and Automotive Radar Markets, Opportunities & Forecasts," Allied Business Intelligence (quotes from August 11, 1998 press release)

N-WEST History in Brief

- April 3, 1998
  - N–WEST Web Site went on–line (http://nwest.nist.gov)
- July 24, 1998
  - Strategy Session attended by 10 people in Boulder
- August 9-10, 1998
  - Kickoff Meeting attended by 45 people
- August 9-12, 1998
  - 1998 IEEE Radio and Wireless Conference (RAWCON) (300 people)
- November 9-10, 1998
  - Second meeting, at 802 Plenary (41 people)
  - 802 approved Executive Committee Study Group on BWA
- January 13-15, 1999
  - First Study Group meeting (66 people)
  - Wrote PAR on interoperable BWA system
  - 4 Task Groups (one to write PAR on Coexistence)
- March 9-11, 1999
  - Meeting with 802 Plenary; Working Group 802.16 approved
- May 10-12, 1999
  - 802.16 Task Group Meeting in Boulder

68 N-WEST Supporting Companies

- **Industry Associations**
  - Cellular Telephone Industry Assn.
  - Wireless Communications Assn.
- **License Holders**
  - Antilles Wireless Cable TV Co.
  - Charles Brinkman
  - Formus Communications, Inc.
  - US WEST Adv. Technologies
  - WinStar Communications, Inc.
  - WNP Communications, Inc.
- **Systems Equipment Providers**
  - 3Com Corporation
  - ADC Telecommunications
  - Alcatel Network Systems
  - Belstar Systems Corp.
  - Ensemble Communications
  - Ericsson Inc.
  - Intraplex
  - Lucent Technologies
  - Motorola Inc.
  - NEC America, Inc.
  - Netro Corpopration
  - Newbridge Networks Corp.
  - Nortel Networks
  - P–COM
  - Philips Broadband Networks
  - Spike Technologies, Inc.
  - WaveCom Electronics Inc.
  - WaveSpan Corporation
  - Wavtrace
  - WinNet MCS
  - Wytec Inc.
- **Subsystems and Components**
  - AMP M/A–COM
  - Andrew Corp.
  - Asvan Technology LLC
  - BroadBand Wireless Inc.
  - Cable AML Inc.
  - CircuitPath Network Systems
  - EER Systems
  - ETM Electromatic
  - Gigabit Wireless Inc.
  - Hewlett-Packard Co.
  - IDT Inc.
  - Integrity Communications
  - Millitech Corporation
  - Phasecom Inc.
  - Raychem Corp.
  - Raytheon Systems Company
  - Raytheon Systems Company
  - Run.com Communications Ltd.
  - SiCOM, Inc.
  - Siemens Microelectronics, Inc.
  - Stanford Wireless Broadband Inc.
  - TelesciCOM Ltd.
- **RF Semiconductors**
  - Fujitsu Compound Semiconductor
  - Harris Semiconductor
  - Sanders, A Lockheed Martin Co.
- **Consultants/R&D/Measurements/Misc.**
  - Anritsu Company
  - Bellcore
  - C&W Systems, Ltd.
  - E B Systems Limited
  - EDX Engineering, Inc.
  - ETRI
  - Hardin & Associates, Inc.
  - HRL Laboratories
  - Illinois Institute of Technology
  - Istari Design, Inc.
  - LCC International Inc.
  - MLJ, Inc.
  - Technical Strategy Associates
  - WFI
  - Wireless Valley Communications, Inc.

CMP

ELECTRONIC ENGINEERING

EE TIMES

Issue 1021 www.eet.com The industry newspaper for engineers and technical management Monday August 17, 1998

Wireless camps' goal: affordable systems

Open-systems push sweeps broadband

By Loring Wirbel

COLORADO SPRINGS, COLO. – Hustling to infuse life into a market perceived as pricey and arcane, proponents of broadband wireless services came to the IEEE Radio & Wireless Conference (Rawcon) last week with strategies for pushing standardization and, by extension, lower-cost, more-accessible systems.

N-West's Marks: Nod for NIST as 'facilitator.'

Proponents of millimeter-wave broadband systems are still smarting from the lukewarm response to the FCC's 28-GHz auctions, which raised a less-than-stellar $570 million from a smaller-than-expected pool of carriers. In a lunch address at Rawcon, National Telecommunication & Information Administration head Larry Irving told local multipoint distribution service (LMDS) developers that they are perhaps the last great hope for "last-mile" broadband services. But much is riding on their ability to get the cost out of their systems.

"I have seven separate wireless systems in my household, but I'm still stuck with 56k in my wireline service," Irving said. "If we had 'calling party pays,' I'd give up my wireline phone completely tomorrow, because you guys will be giving me broadband data service a lot faster than my wireline phone company."

A new report from Allied Business Intelligence (Oyster Bay, N.Y.) states that the mul-

►CONTINUED ON PAGE 126

EE Times Report on N-WEST

"Proponents of broadband wireless services came to RAWCON'98 last week with strategies for pushing standardization and, by extention, lower-cost, more accessible systems."

- "Open–Systems Push Sweeps Broadband," *Electronic Engineering Times*, August 17, 1998, Page 1

License Holder's View

[In his RAWCON'98 Keynote Address, Barclay Jones, Chief Technical Consultant of WNP Communications, the dominant LMDS auction winner]

"cited the work of the recently formed National Wireless Electronic Systems Testbed and said that far more standards to drive interoperability need to be developed in LMDS services."

- *EE Times Online*, August 13, 1998

Industry Association View

"It's a very important initiative by the Commerce Department to help jump–start this industry. It's helpful to have a neutral party for manufacturers to be willing to share confidential information."

- Andrew Kreig, President, Wireless Communications Association (over 250 member companies in fixed wireless), quoted in

"Wireless Technology Catches New Waves," *Rocky Mountain News*, August 17, 1998, Page B1

Industry Association View (ctd.)

"[N-WEST] is a important new measurements and standards public/private partnership to promote the development of fixed wireless broadband by tests and measurements at the system and component level... We congratulated Secretary of Commerce William Daley in person on this initiative, and strongly encouraged members to join."

- Andrew Kreig, Wireless Communications Association, *LMDS Update*, August 16, 1998, Page 1

U.S. Federal Government View

"the cost of terminal equipment, may still prevent some wireless services from being used on a broad scale. We need to figure out how to lower these costs to make wireless technology more widely available. That is why I think the work of N-WEST is so important... Collaboration within the industry could help lower the cost of user terminals and, I hope, make broadband wireless an accessible alternative for more Americans."

- Larry Irving, Assistant Secretary for Communica-tions and Information, U.S. Department of Com-merce, August 10, 1998 (RAWCON'98 Banquet Ad-dress: "The Next Waves In Wireless Technologies")

Standardization Approach

IEEE: Institute of Electrical and Electronics Engineers

- IEEE Computer Society
  - IEEE 802: LAN/MAN Standards Committee
    - Standards for Ethernet, Wireless LAN, etc.
    - Prestigious and influential
    - Attended July 1998 Plenary
    - N-WEST met at November 1998 Plenary; 802 approved
      - » Study Group on Broadband Wireless Access
    - Met with 802.11 and ETSI BRAN in January 1999
    - Met with 802 Plenary in March 1999
      - » Working Group 802.16: Broadband Wireless Access
      - » Co-sponsor: IEEE Microwave Theory & Tech. Soc.

CMP

ELECTRONIC ENGINEERING

EE TIMES

Issue 1044 www.eet.com The industry newspaper for engineers and technical management Monday January 18, 1999

Standards efforts from Europe, Japan and U.S. coalesce around gigahertz networks

Groups eye unified broadband wireless specs

By Loring Wirbel

ORLANDO, FLA. – Developers took the crucial first steps last week in synchronizing global standards for all broadband wireless systems, from 5 GHz to 50 GHz and beyond, as standards bodies from the United States, Europe and Japan convened here. While strong differences of opinion persist over physical interfaces and data-link structures, the meeting advanced the goal of a common infrastructure between in-building wireless LANs and new, micro- and millimeter-wave broadband networks with a cellular-like infrastructure.

Wide-area schemes showed the strongest signs of convergence, though some wrinkles must be ironed out. Among local-area networks, separate U.S. and European wireless offerings continue to resist harmonization, and a nascent class of "personal-area" wireless links still occupies a relatively undefined spot at the fringes of interoperability.

The IEEE's 802.11 wireless-LAN working group and

▶CONTINUED ON PAGE 16

Study Group Members

97 people from 70 companies attended meetings

3Com (4)
Alcatel USA
ADC Telecommunications
AMP, Inc. (3)
Andrew Corporation
Angel Technologies Corp.
Anritsu Company
AT&T
Belstar Systems Corp.
BNA Systems
Bosch Telecom, Inc. (2)
BreezeCOM
Broadband Ventures
C&W Systems, Ltd.
California Amplifier, Inc.
CircuitPath Network Systems
Cisco Systems, Inc.
ComStar Communications
Dot.Wireless
E. A. Robinson Consulting
Ensemble Comms. (2)
Ericsson Inc. (2)
Escape Communications
Eurobell
Filtronic Solid State
Hardin & Associates, Inc.
Harris Corporation (3)
Hewlett-Packard Company
HRL Laboratories
IDT Inc.
Industry Canada (2)
Integrity Communications
Kyocera DDI Institute
LCC International Inc.
Logimetrics, Inc.
Lucent Technologies (2)
MICRILOR, Inc.
Millitech Corporation
MMAC
Motorola Inc. (2)
Netro Corpopration
Newbridge Networks Corp.
NIST (2)
Nokia (2)
Nortel Networks (5)
NTT Electronics Corp. (NEL)
PCIA
Phasecom Inc. (1)
Philips Broadband Networks (2)
PSW Technologies
Raytheon Systems Company
SiCOM, Inc.
Siemens (3)
Stanford Wireless Broadband (4)
Technical Strategy Associates
Telegen Ltd.
Teligent
TelesciCOM Ltd. (2)
Texas Instruments
TRW
University of Sheffield
U S WEST Advanced Technologies
WaveSpan Corporation
Wavtrace, Inc. (3)
World Access Inc.
WinStar Network Services
Wireless Communications Assn.
Wytec Incorporated (2)

Definition of Scope

The Broadband Wireless Access (BWA) networks considered are those which:

- **use wireless links with microwave or millimeter wave radios**
- **use licensed spectrum (typically)**
- **are metropolitan in scale**
- **provide public network service to fee-paying customers (typically)**
- **use a point-to-multipoint architecture with stationary rooftop or tower-mounted antennas**
- **provide efficient transport of heterogeneous traffic with QoS support**
- **are capable of broadband transmissions (>2 Mbit/s)**

Project Description (PAR)

- **TITLE: Air Interface for Fixed Broadband Wireless Access Systems**
- **SCOPE: This standard specifies the physical layer and media access control layer of the air interface of interoperable fixed point-to-multipoint broadband wireless access systems. The specification enables transport of data, video, and voice services. It applies to systems operating in the vicinity of 30 GHz but is broadly applicable to systems operating between 10 and 66 GHz.**
- **LIAISONS: ETSI BRAN; ITU-R 8a/9b**
- **DUE DATE: January 31, 2001**
- **APPROVED BY IEEE: March 18, 1999**

Current Projects

- Coexistence PAR
- System Requirements Document
- Rules and Procedures

802.16 Meeting Schedule

- May 10-12, 1999
  - Boulder
- July 6-8, 1999
  - Montreal (802 Plenary)
- August 5-6, 1999
  - Denver
  - 1999 IEEE Radio and Wireless Conference (RAWCON'99)
- September, 1999: *site to be determined*
- November 9-11, 1999
  - Hawaii (802 Plenary)

Resources

- N-WEST
  - http://nwest.nist.gov
  - mailing list
- 802.16
  - web site
  - email reflector (open)
  - email reflector archives

LMDS Systems
Part I

Presented by

J. Leland Langston, P.E.

Raytheon Telecommunications

Raytheon

Propagation Characteristics

For MMW Systems Near 30 GHz

MMW Propagation

- Key LOS parameters affecting propagation
  - Frequency (GHz)
  - Path Length (km)
  - Excess attenuation due to water vapor
  - Excess attenuation due to mist and fog
  - Excess attenuation due to Oxygen
  - Gaseous loss
  - Excess attenuation due to rainfall
- Non-LOS Parameters
  - Trees, Buildings, Terrain and other blockage

Path Loss Equation for MMW

$$Att_{dB} = 92.45 + 20 \log F_{GHz} + 20 \log D_{km} + a + b + c + d + e$$

Where

F = frequency, GHz
D = propagation distance, km
a = excess attenuation in dB due to water vapor
b = excess attenuation in dB due to mist/fog
c = excess attenuation in dB due to Oxygen
d = absorption losses due to other gases
e = excess attenuation due to rain

from *Radio System Design for Telecommunications*, Roger L. Freeman

Coefficients for Estimating Attenuation due to Rain

Table I Coefficients

Frequency GHz	a_h	a_v	b_h	b_v
1	0.0000387	0.0000352	0.912	0.880
2	0.000154	0.000138	0.963	0.923
4	0.00065	0.000591	1.121	1.075
6	0.00175	0.00155	1.308	1.265
10	0.0101	0.00887	1.276	1.264
12	0.0188	0.0168	1.217	1.200
15	0.0367	0.0335	1.154	1.128
20	0.0751	0.0691	1.099	1.065
25	0.124	0.113	1.061	1.030
30	0.187	0.167	1.021	1.000
35	0.263	0.233	0.979	0.963
40	0.350	0.310	0.939	0.929

Rainfall Intensity Exceeded (mm/hr) for Various Rain Regions

Table II

% Outage	A	B	C	D	E	F	G	H	J	K	L	M	N	P	Q
1	0.1	0.5	1	2.1	0.6	2	3	2	8	1.5	2	4	5	12	24
0.3	0.8	2	3	4.5	2.4	5	7	4	13	4.2	7	11	15	34	49
0.1	2	3	5	8	6	8	12	10	20	12	15	22	35	65	72
0.01	8	12	15	19	22	28	30	32	35	42	60	63	95	145	115

$$A_{dB} = a R^b$$

Where

A is the excess path attenuation (i.e., excess above free space)
a and b are the coefficients from Table I above
R is the rain rate from the Table II above

from *Radio System Design for Telecommunications*, Roger L. Freeman

Raytheon

Examples for Dallas or Chicago LMDS (For Link Availability of 99.9%)

a = 0.08 dB/km at sea level and 15 degrees C (7.5 g/m^3)
b = 0.1 dB/km
c = 0.02 dB/km at sea level and 15 degrees C
d = 0.08 dB
e = 3.67 dB/km for Dallas-Houston, Vertical Polarization, 99.9 Avail.
= 2.0 dB/km for Chicago, Vertical Polarization, 99.9 Avail.

Total Excess Attenuation = 3.95 dB/km for Dallas-Houston
= 2.28 dB/km for Chicago

For a 4 km path, Excess Loss = 15.8 dB for Dallas or Houston
= 9.12 dB for Chicago

Interference Issues

LMDS Systems

Sources of Interference

- Intra-System Interference
  - Multipath
  - Cross Polarization Component
  - Adjacent Channel Interference
  - Co-channel Interference
- Inter-System Interference
  - Satellite Systems
  - Other LMDS Systems
  - Out-of-Band Interference

Interference Mitigation (Intra-System)

- Multi-Path
  - Use Highly Directional Antennas
  - Give Careful Consideration to Placement of Antennas
  - Use antennas with low side lobes for CPE
  - Use robust modulation and error correction techniques
- Cross Polarization
  - Major factor for systems which exploit polarization at same base station for frequency reuse--need antennas with good cross-pol
  - Minor problem for systems which use polarization for separating base stations
  - Use robust modulation and error correction techniques

Interference Mitigation (Intra-System)

- Adjacent Channel
  - Use constant envelope modulation
  - Use linear power amplifiers
  - Use robust modulation and error correction techniques
- Co-Channel Interference
  - Use highly directional antennas with low side lobes for CPE
  - Deploy base stations with maximum separation distance for same frequency, same polarization
  - Use minimum transmit power; control TX power on return path
  - Use robust modulation and error correction techniques
  - Use adaptive interference suppression techniques

Interference Mitigation (Inter-System)

- Use highly directional antennas with low side lobes
- Use high-dynamic range LNA's and first mixers
- Develop standards for coexistence
- Employ low LO leakage designs in TX and RX circuits
- Develop adequate image rejection receivers
- Employ filtering at MMW frequencies
- Use linear Power Amplifiers
- Use constant envelope modulation

Antenna Characteristic

Designs for LMDS

Antenna Characteristics

- Antenna Gain
  - Base Station: 15 - 25 dBi
  - CPE: 30 - 40 dBi
- Sidelobes
  - CPE (First): 22-25 dB down from peak of beam
  - CPE (Outer): 30 - 35 dB down from peak of beam
- Cross Pol: 30 - 35 dB over adjacent sector
- Beam Width
  - Base Station: 30 - 90 degrees
  - CPE: 2 - 3 degrees

Frequency Reuse Techniques

Expand Capacity of LMDS Systems

Frequency Reuse

- Cell-to-Cell
  - Almost all LMDS systems can re-use the full frequency band from cell-to-cell
- Within a cell
  - Some system designs can reuse the full frequency band many times within a cell by using orthogonal polarization or frequency sub-bands

Frequency Reuse Consideration

- Power management
  - Use minimum TX power necessary to close link
  - Adaptively control TX power, particularly in return link
- Use highly directional antennas with low sidelobes
- Use robust modulation and error correction techniques
- Use frequency band segmentation
- Use orthogonal polarization

Frequency Re-use via Polarization

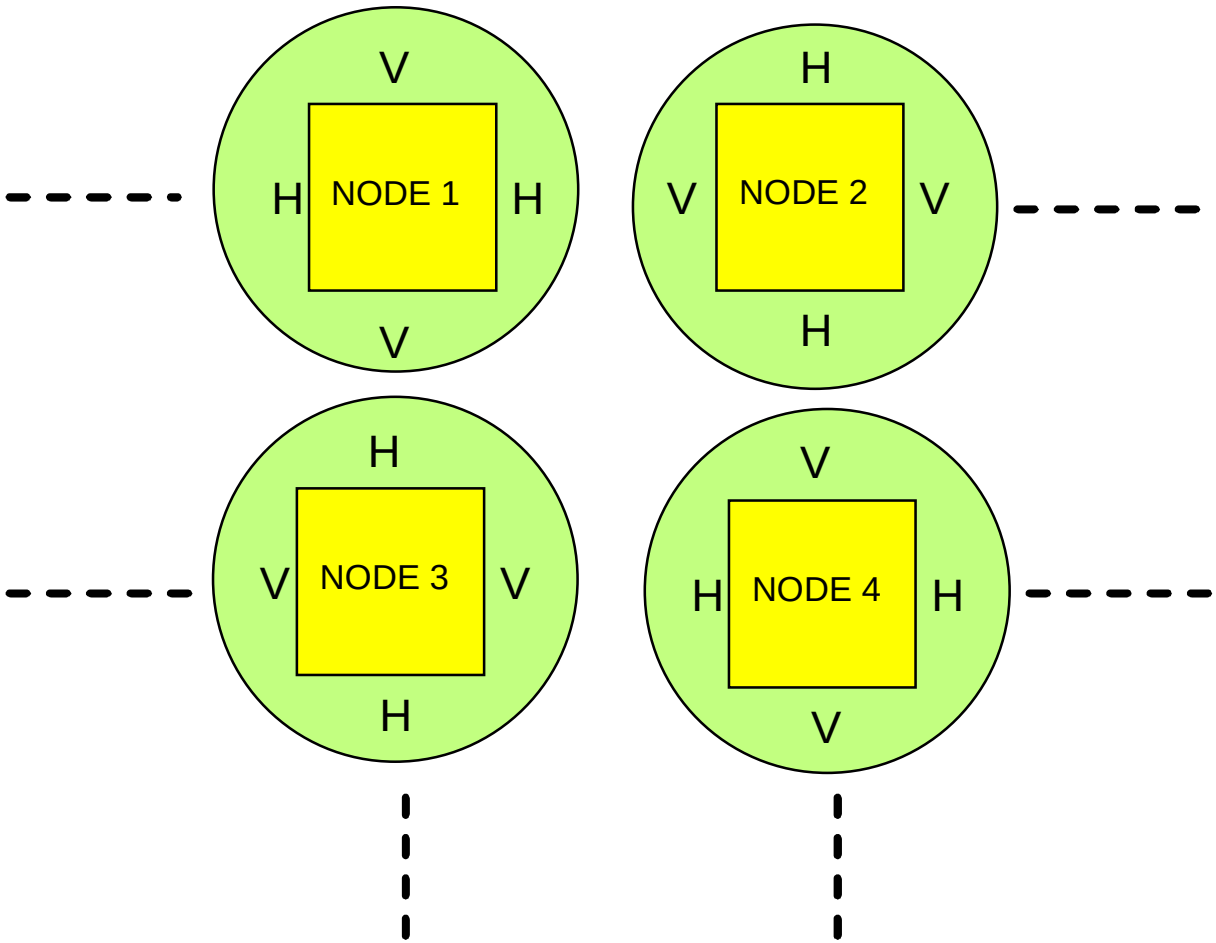

Raytheon

Four-Frequency, Six-Sector Frequency Re-Use

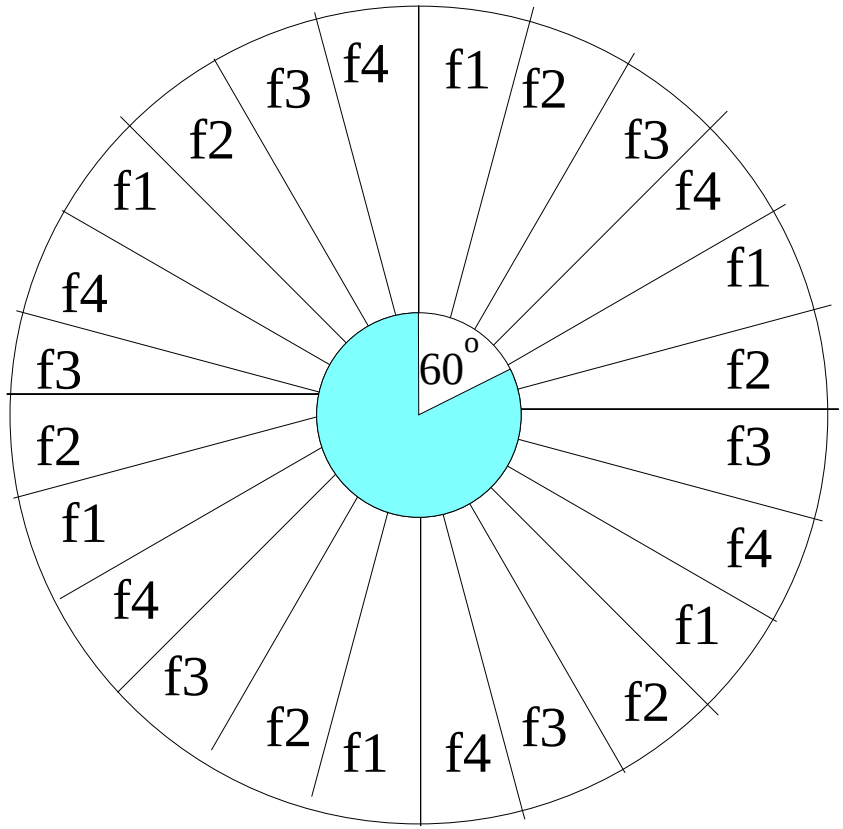

Raytheon

Break

Systems

Part II

Available RF Power

Power Amplifiers for LMDS

PA Considerations

- Linearity
- Single MMIC Power Capability
- Power Combiners
- Cost

Why Linear Performance?

- Single Carrier Operation
  - Modulation techniques such as QPSK or Off-Set QPSK are filtered at low levels to achieve low spectral sidelobes and efficient spectrum utilization.
  - Filtering results in non-constant amplitude signal.
  - Subsequent non-linear amplification results in restoration of spectral sidelobes thus causing adjacent channel interference (or worse, out-of-band interference)
- Multi-Carrier Operation
  - Non-linear amplification of multi-carrier signals result in intermodulation distortion products which cause interference

Power Available from Single MMICs

- For linear amplifiers, power outputs of 2-3 Watts (measured at the 1 dB compression point) from a single MMIC appears feasible
- For linear performance, power outputs is reduced to 1 Watt
- Cost of a single MMIC today for this power level is still rather high for commercial or consumer terminals, but acceptable for base stations
- Low-cost single MMICs can deliver about 100 mW while maintaining reasonably linear performance. (Acceptable linearity is typically two-tone 3rd order IMD of -25 dBc.)

Power Combining

- The outputs from multiple MMICs can be combined to yield greater power output.
- The cost of such amplifiers increases significantly over that of single MMICs
- Combiners which are low-loss tend to be large; small combiners tend to be lossy.

Cost

- CPE equipment is particularly sensitive to cost. A major cost driver is the PA cost.
- The cost of a transmitter for use at 30 GHz can be rather expensive when power output levels are high.
- The cost of a 100 mW PA is significantly lower than the cost of a one watt PA.

Oscillator Stability and Phase Noise

Important System Considerations

Oscillator Stability

- Long-Term
  - Transmitter Frequency Control
  - Maintaining Receiver Frequency Near Expected Value to Minimize Acquisition Time of Demodulator
- Short-Term
  - Phase Noise Degrades System Performance
  - MMW frequencies exacerbate problem

Approaches for Achieving Oscillator Stability

- Long-Term
  - Use TCXO or OCXO in CPE
  - Lock Base Station to Precision Oscillator or GPS
  - Lock CPE to received signal
  - Lock MMW LO to reference signal
- Phase Noise
  - Lock MMW LO to crystal reference
  - Make loop bandwidths of phaselock loops wide enough to track low-frequency phase noise, e.g., 10 - 100 kHz.

Typical Phase Noise Performance

- For MMW LO
  - 10 kHz: < -80 dBc-Hz
  - 100 kHz: < -90 dBc-Hz
  - 1 MHz: < -100 dBc-Hz
- For all other oscillators:
  - The phase noise is typically 15-20 dB below that at the MMW frequencies so the major contributor is the MMW oscillator.

Modulation

A Critical Choice

Theoretical Channel Capacity

$$C/B = \log_2 (1 + S/N)$$
$$= [\log_{10} (1 + S/N)]/\log_{10} 2 = 3.32 [\log_{10} (1 + S/N)]$$
$$= 3.32 [\log_{10} \{(S+N)/N\})]$$
$$= 0.332 [(S+N)/N]_{dB}$$

where

C = channel capacity in bps
B = Channel Bandwidth in Hz
S = Signal Power in Watts
N = Noise Power in Watts

Raytheon

Modulation Considerations for LMDS

- Spectral Efficiency
  - High order modulation results in greater spectral efficiency
  - But, requires higher C/N (or Eb/No)
- Higher order modulation techniques require more TX power.
- LMDS Systems tend to be interference limited.
- Hence the more crucial parameter is C/(N+I) where I > N
- Higher order modulation techniques require greater PA Linearity
- Constant envelope modulation techniques such as GMSK introduce intersymbol interference and require equalization.
- Modulation technique should be considered with error correction
- Good compromise modulation: OQPSK or pi/4 QPSK

Forward Error Correction

Trading Bandwidth for Performance

Why Use Forward Error Correction?

- High-Speed data links are not efficient when using retransmission to correct errors.
- LMDS systems are characterized by high levels of interference.
- High QoS requires low BER, e.g., 10^{-9}
- Modern protocols depend on low cell loss rates.

Some Suitable FEC Codes

- Concatenated Codes Provide Robust System Performance.
- Burst transmissions are well-suited to block codes.
- Reed-Solomon codes are proven and are readily implemented in today's large silicon chips. They are also a good match for ATM-like cells.
- Convolutional codes using soft-decision Viterbi decoding offer good performance improvement with economical implementations.

Link Performance -1

LMDS 28 GHz, Rain-Faded Link Calculations				
User Terminal	**AT EDGE OF COVERAGE**			
	UPLINK		**DOWNLINK**	
	In Units	In dB	In Units	In dB
Transmitter System				
Number of Carriers	1		1	
TX Power, Total, W	0.1		1	
TX Power, W	0.10	-10.00	1.00	0.00
Feed Loss		0.90		1.00
No. of Elements			NA	
Single Element Gain, dBi				NA
TX Ant Gain, Theoretical		38.00		18.00
TX Ant Beam Width, degrees	1.79		17.88	
Effiency Factor	0.6	-2.22	0.6	-2.22
Radome Loss, dB		1.00		2.00
Scan Loss, dB		0.00		0.00
Loss to Edge of Beam, dB		0.00		4.00
Pointing Loss		1.00		0.20
EIRP per Carrier, dBW		22.88		8.58
Transmission Loss				
Frequency, GHz	28.00		28.00	
Slant Range, km	4		4	
Free Space Loss		133.41		133.41
Polarization Loss		0.07		0.07
Gaseous Loss		1.12		1.12
Rain Loss		16.00		16.00
Total Path Loss		150.60		150.60
Received Power at RX Ant, dBW		-127.72		-142.02

Link Performance -2

LMDS 28 GHz, Rain-Faded Link Calculations				
User Terminal	**AT EDGE OF COVERAGE**			
	UPLINK		**DOWNLINK**	
	In Units	In dB	In Units	In dB
Receiver System				
Antenna Gain				
Freq, GHz	28.00		28.00	
Aperture, meters	0.03		0.30	
Theoretical Gain, dB		18.89		38.89
Effiency Factor	0.60		0.60	
Actual Gain, dB		16.67		36.67
Loss to Edge of Beam, dB		4.00		0.00
Pointing Loss, dB		0.2		1.0
Pol Loss, dB		0.10		0.10
Radome Loss, dB		2.00		1.00
Scan Loss, dB		0.00		0.00
Feed Loss, dB		1.0		0.9
Effective Antenna Gain, dB		9.4		33.7
RX Antenna Beam Width, deg	16.1		1.6	
Sky Temp, K	350		350.0	
Feed Loss, dB		1.0		0.9
Feed Loss Factor	1.3		1.2	
Antenna Noise Temp, K	337.7		338.8	338.8
Gain of First Stage	10.0	10.0	10.0	10.0
NF of First Stage, dB		5.0		5.0
Noise Temp First Stage, K	627.1		627.1	
Gain of Second Stage	10.0	10.0	10.0	10.0
NF of Second Stage, dB		5.0		5.0
Noise Temp Second Stage, K	627.1		627.1	
Gain of Third Stage	10.0	10.0	10.0	10.0
NF of Third Stage, dB		6.0		6.0
Noise Temp Third Stage, K	864.5		864.5	
Receiver Noise Temp, K	698.4		698.4	
Receiver Noise Figure, dB		5.3		5.3

Link Performance -3

LMDS 28 GHz, Rain-Faded Link Calculations				
User Terminal	**AT EDGE OF COVERAGE**			
	UPLINK		**DOWNLINK**	
	In Units	In dB	In Units	In dB
Boltzmann Const. (Ref to Watts)	1.38E-23	-228.60	1.38E-23	-228.60
Temp, deg K (dB-K)	1036.1	30.15	1037.2	30.16
RX Sig Power, C (dBW)		-118.4		-108.4
Effective No, dBW-Hz		-198.4		-198.4
C/No		80.1		90.1
Payload Rate, Mbps	2.05		47.00	
Header Overhead	0.10		0.10	
Information Rate, Mbps	2.25		51.89	
Coding Rate, R	0.69		0.80	
Coded Bit Rate, Mcps	3.26		64.86	
Preamble/Unique Word Overhead	0.05		0.01	
Modulation Level, m	2.00		2.00	
Modulated Symbol Rate, Msps	1.71		32.75	
Excess Bandwidth Factor, a	0.30		0.20	
Channel BW, MHz	2.23		39.31	
Noise Power, dBW		-135.0		-122.5
C/N, Received (Input to Demod)		16.6		14.1
Interferrence (C/I), dB				
Intra-System Interf, dBC				
Cross Pol		-15.0		-15.0
Co-Channel		-20.0		-20.0
ACI		-20.0		-20.0
ISI		-25.0		-25.0
Power Variation, dB		1.0		1.0
EOB-to-POB Gain Variation, dB		0.5		0.5
Normalized Interf, Io1, dBW-Hz		-192.9		-195.4
Inter-System Intrf, Io2, dBW-Hz		-201.0		-201.0
Effective No, dBW-Hz		-198.4		-198.4
No + Io, dBW-Hz		-191.4		-192.9
Eb		-181.9		-185.5
Eb/No		16.6		12.9
Eb/(No+Io)		9.5		7.4
Implementation Loss		1.0		1.0
Required Eb/(No+Io)		4.6		4.6
Unallocated Margin, dB		**3.9**		**1.8**

Spectrum Management

- Efficient use of spectrum
- Maximizing frequency re-use
- Minimizing interference
- Power Control and use of minimum power
- Dynamic allocation of bandwidth

Network Considerations

Different Applications and

Different Network Protocols

NETWORK CONSIDERATIONS for LMDS

LMDS can Provide Voice, Video and Data Services Using Many Different Switching and Transport Standards

*** Telephony**
- **Circuit Switched**
  - **Fixed Bandwidth**
  - **Circuit established and maintained for each call**
- **PDH**
  - **North American Digital Hierarchy for US and Canada (DS0, DS1, DS3, etc.)**
  - **ITU-T International (E1, E3, etc.)**
- **Services Provided**
  - **Voice (POTS)**
  - **Data (Low-Speed using analog modems on POTS)**
  - **FAX (Analog modems on POTS)**
  - **NISDN (Voice and data at rates up to 128 KBPS)**
- **Ubiquitous Worldwide Network**

NETWORK CONSIDERATIONS for LMDS (cont...)

*** Video**

- **Broadcast Type Services**
  - **Basic Services**
  - **Multi-Cast Services**

- **Switched Video Services (BISDN)**
  - **Entertainment**
  - **Video Conferencing**

- **Digital Delivery**
  - **MPEG-2 using Combination of TDM/FDM**
  - **QPSK modulation with Concatenated Error Correction Coding**

NETWORK CONSIDERATIONS LMDS (cont...)

*** DATA**

- Switched Services
  - Circuit Switched
    - Low-Speed via POTS (Using Modems)
    - NISDN (Up to 128 kbps)
    - Dataphone Digital Services (DDS)
    - Switched 56 kbps
  - Packet Switched
    - X.25 (Low-Speed Data) and Frame Relay
    - ATM (High-Speed Data, Including BISDN and SMDS)
    - TCP/IP Traffic (over ATM using AAL-x)
- Non-Switched Services
  - Private Lines
    - Dedicated DS0 Circuits (Analog or Digital)
    - Dedicated T1
    - Fractional T1
  - Permanent Virtual Connections
    - Frame Relay
    - ATM

Other Network Functions

- Call Set-Up and Routing
- Resource Management
- QoS Functions
- Collection of Billing Data
- OSS Functions

Example LMDS System

Architecture and Elements

Prototypical LMDS Wireless Network

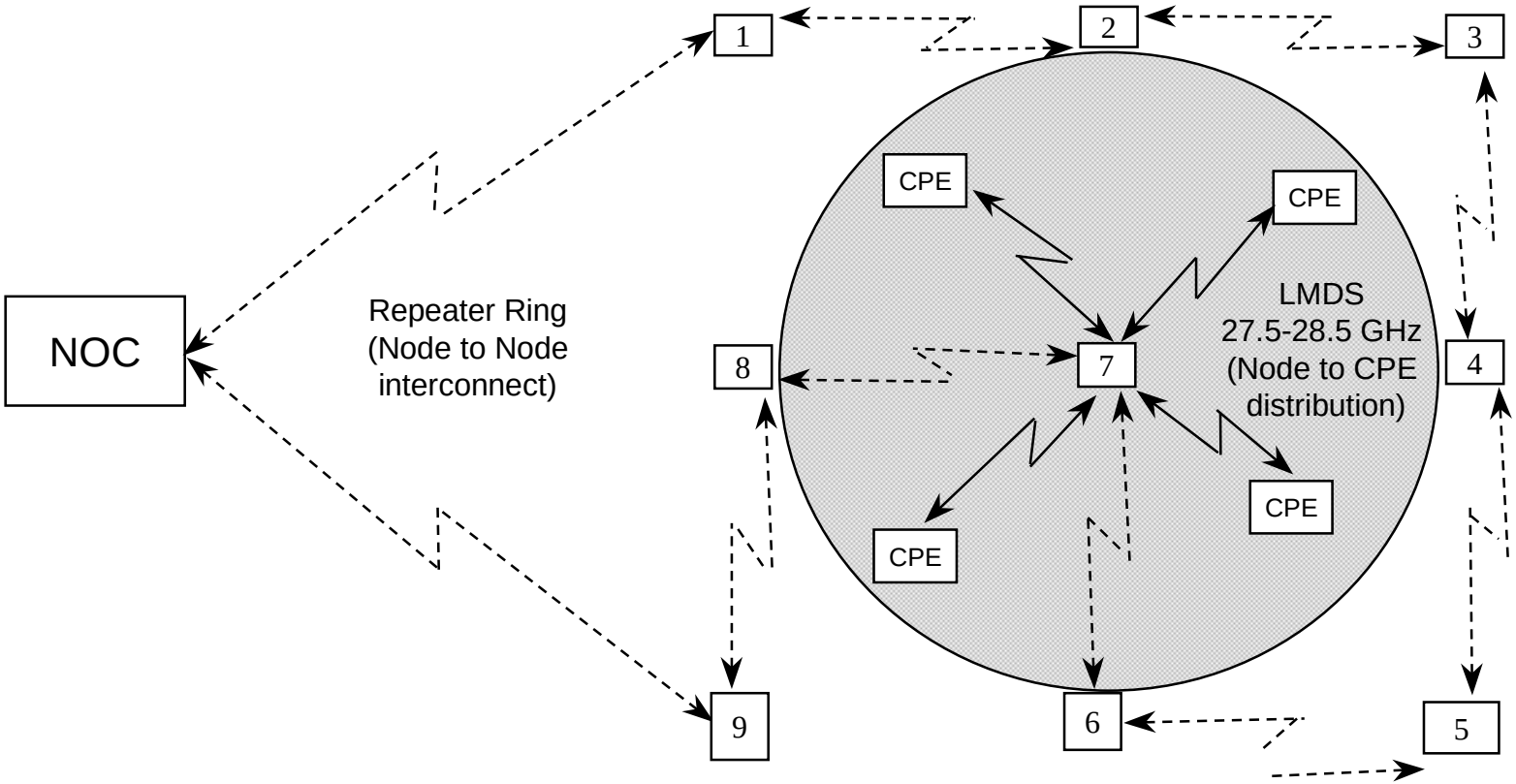

Legend: NOC — Network Operations Center

1-9 — 4 Overlapping Nodes/cells for two-way broadband distribution of LMDS services

CPE — Customer Premise Equipment (Antenna, downconverter, modems, MUX, video conf equip)

Wireless repeater ring/trunk (Node to Node distribution)

LMDS 27.5-28.35 GHz communications (Node to CPE distribution)

JLL 04/12/99

Raytheon

LMDS System Concept Block Diagram

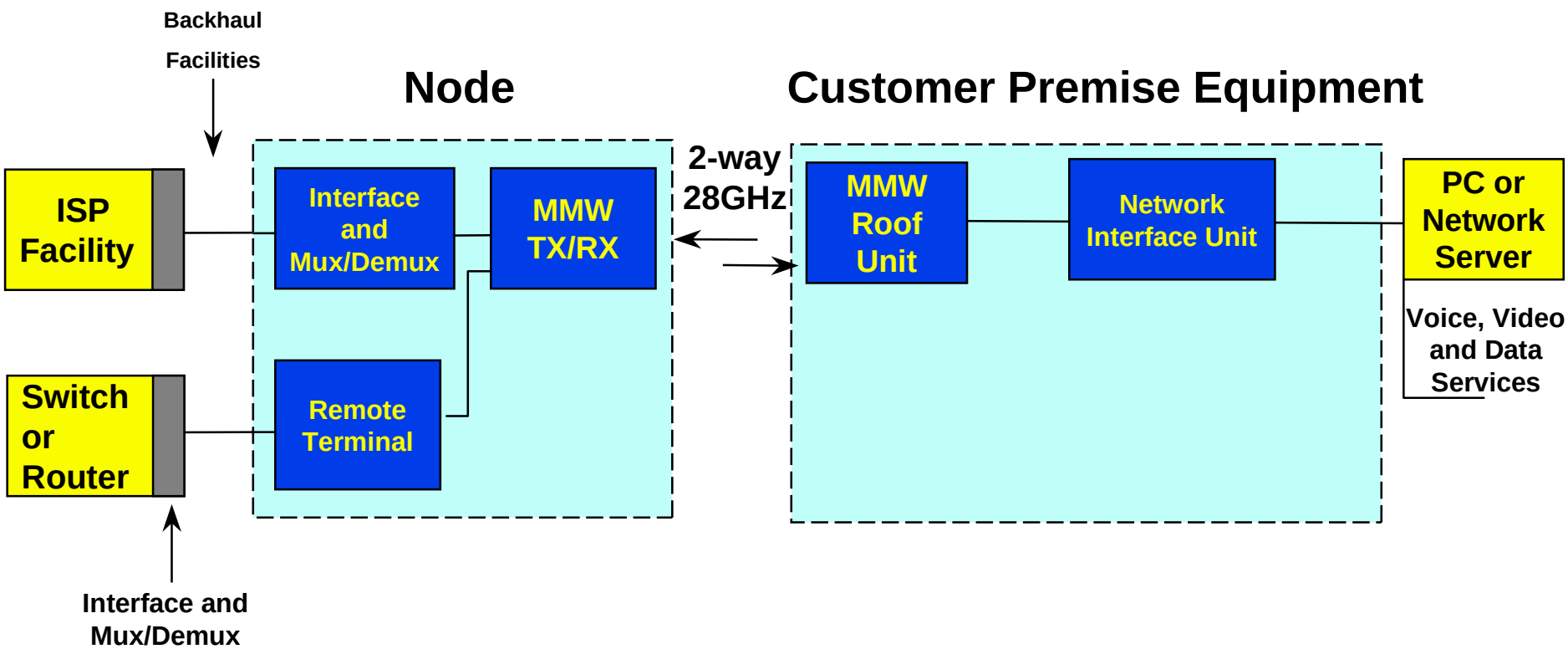

Raytheon

FDD Base Station Simplified Block Diagram

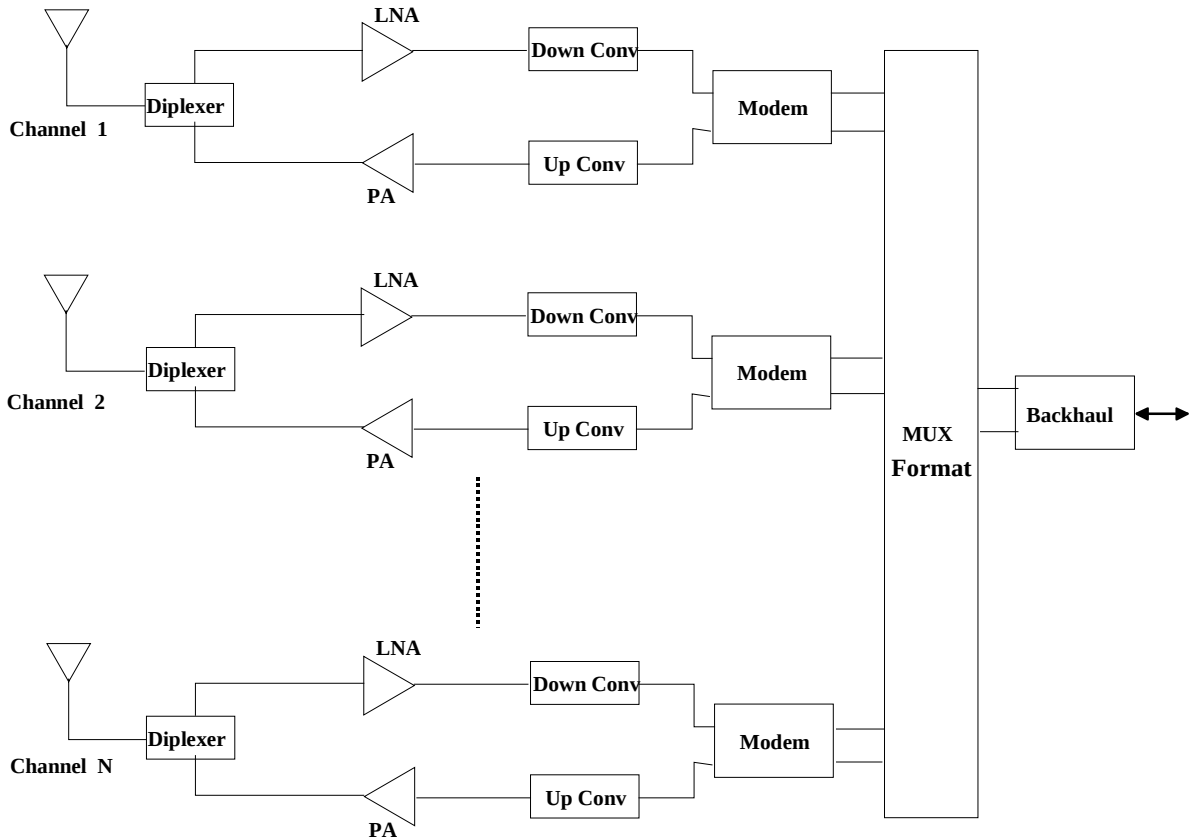

Raytheon

TDD Base Station Simplified Block Diagram

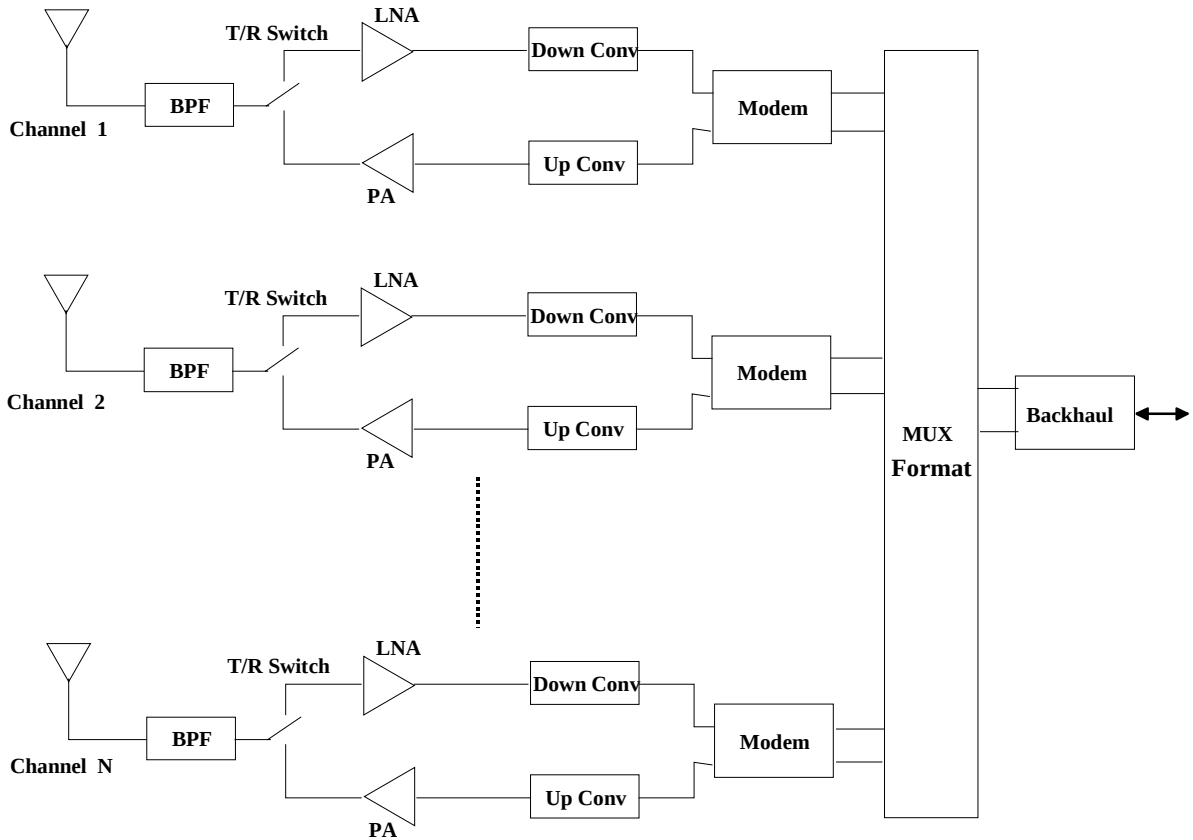

Raytheon

LMDS User Equipment

Roof Antenna/Transceiver

Indoor Unit

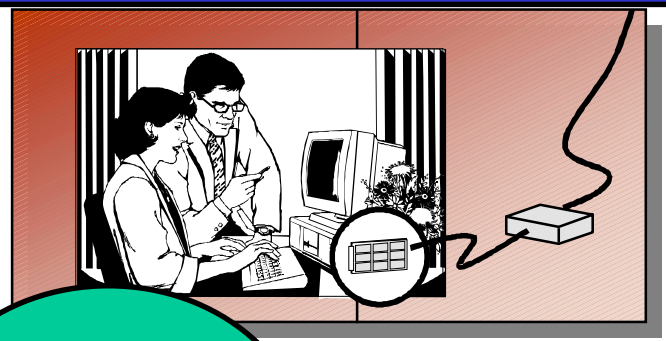

RF Unit (Outdoor Unit)

Rx
Power
Tx

Network Interface Unit (Indoor Unit)

Ethernet User Interface

Prime AC Power

User Terminal 1-10 Mbps

Raytheon

Generic Outdoor Unit Block Diagram

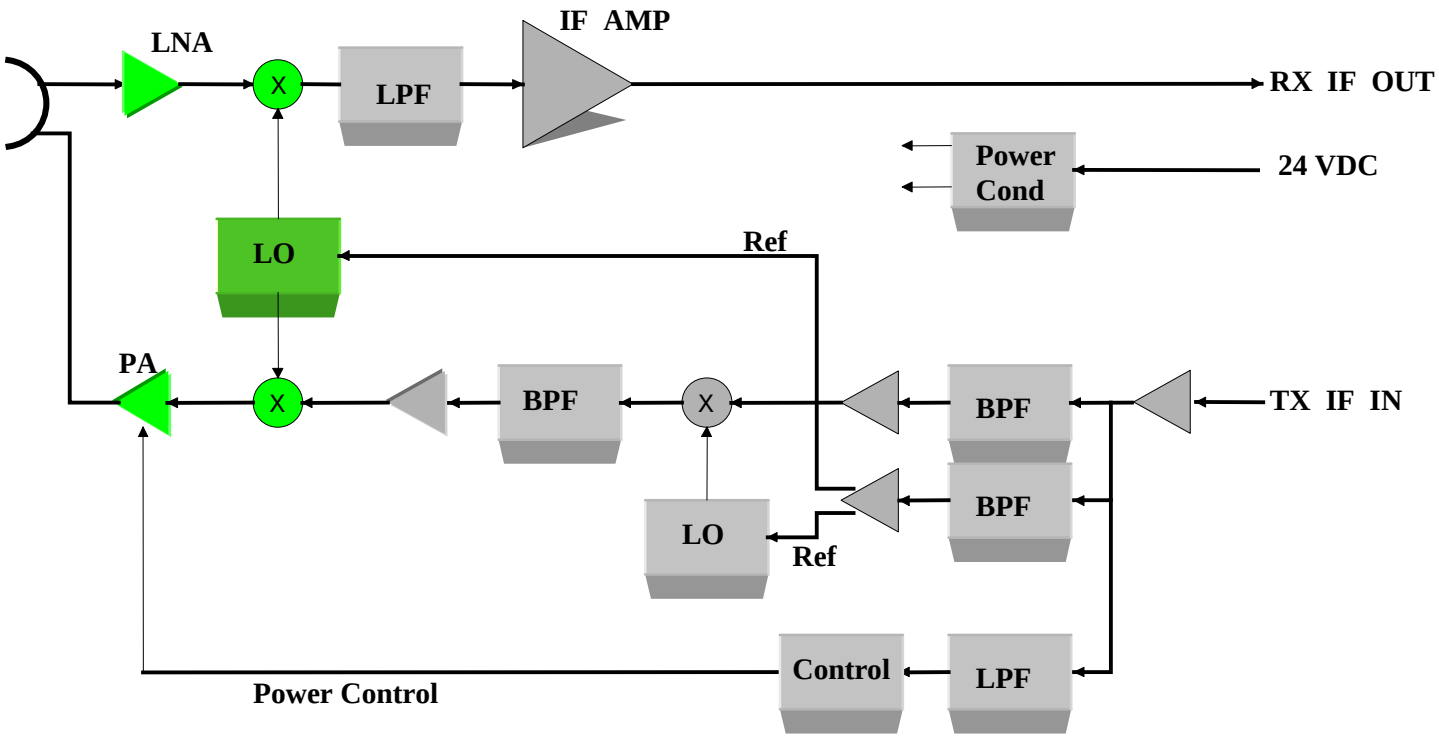

Raytheon

Indoor Unit Block Diagram

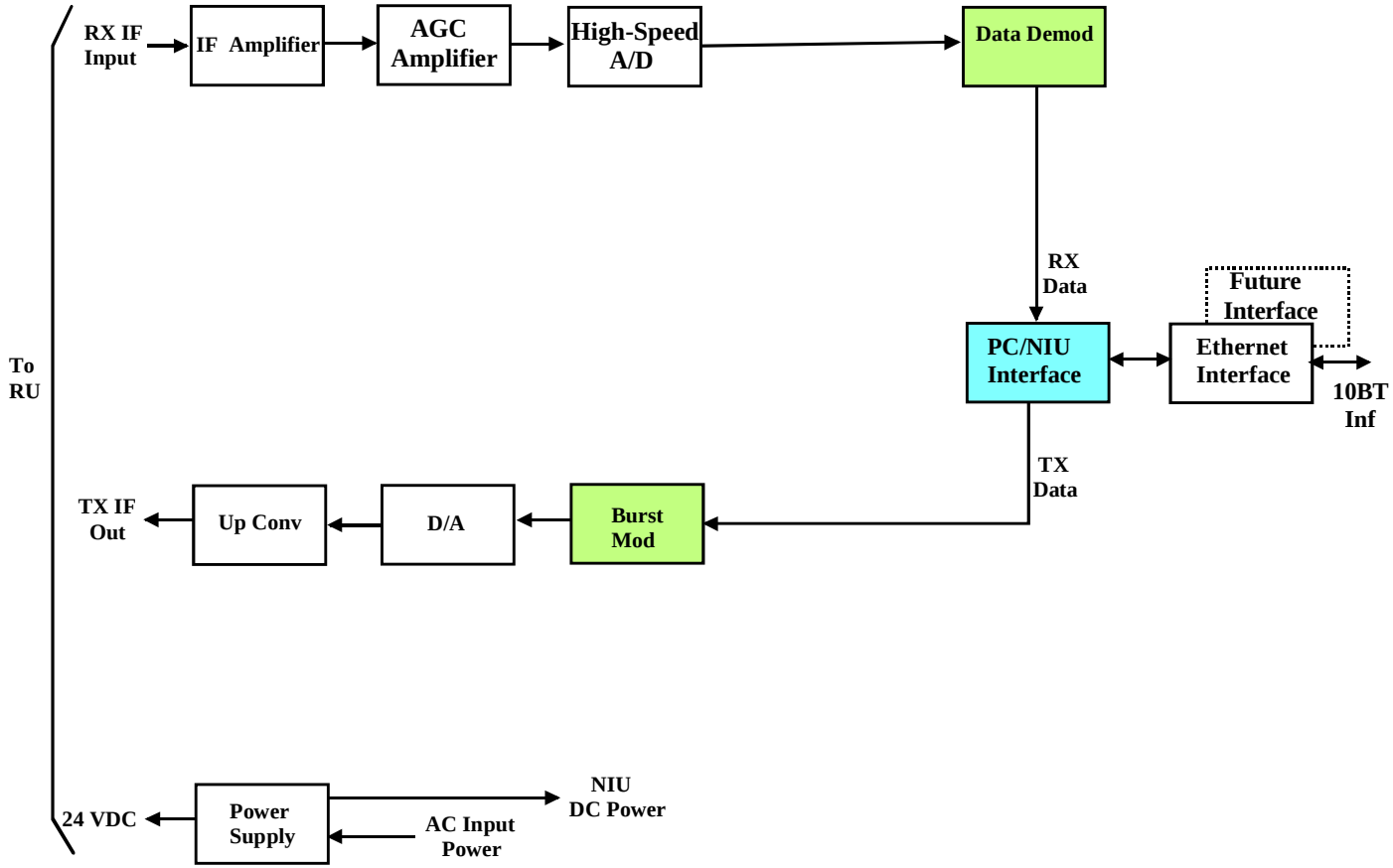

Raytheon

Enabling Technologies for LMDS

- **Gallium Arsenide MMICs**
- **Phased Array Antennas**
- **Digital Signal Processing**
- **ASICs**
- **Video Compression**
- **Digital “Set-Top-Box”**
- **Video Servers**
- **Digital Telephony Equipment**
- **SONET/ATM**
- **Communications Software**

GaAs MMIC Technology for LMDS Systems

Presented by

Eli Reese

TriQuint Semiconductors

Raytheon

GaAs MMIC Technology for LMDS

Eli Reese
TriQuint Semiconductor

Outline: GaAs Technology for LMDS

- Introduction
- Low Noise Amplifiers
- Power Amplifiers
- Other Functions
- Summary

Introduction

- What is GaAs? Why is it useful?
  - GaAs is a compound semiconductor which provides key advantages relative to Silicon
    - Higher Electron Mobility - allows the realization of higher performance transistors for a specific application, including lower noise, higher gain, higher efficiency …
    - Semi-insulating substrate - allows higher levels of RF functional integration on chip with low loss passive elements.
  - GaAs is the semiconductor of choice for applications at microwave and millimeter-wave frequencies

GaAs Terms and Definitions

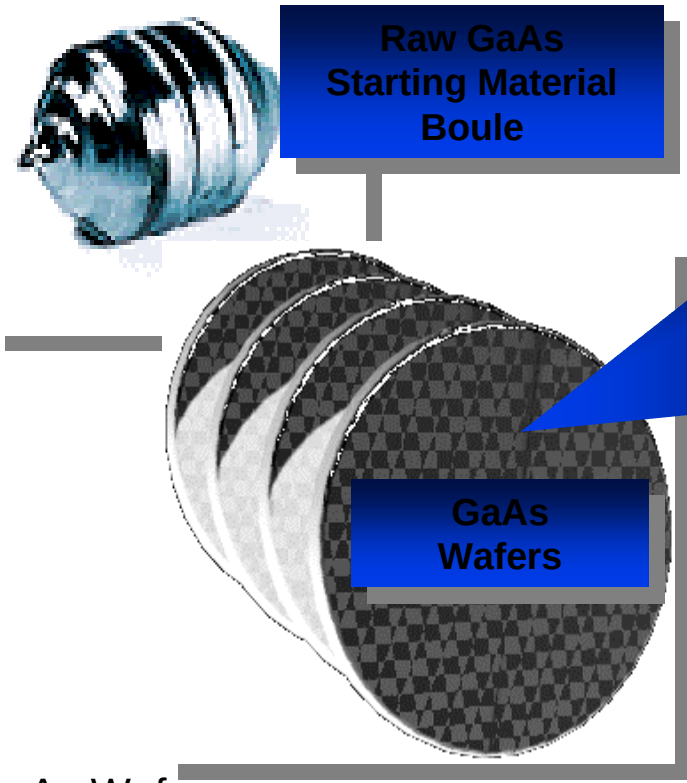

- MMIC - Monolithic Microwave Integrated Circuit
- There are many MMICs on each wafer (100 to >1000)
- MMICs are circuits that include transistors and other passive circuit elements (R,L,C)

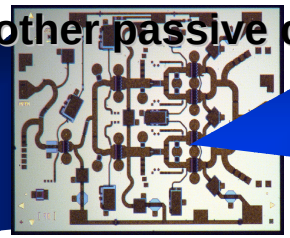

GaAs MMIC

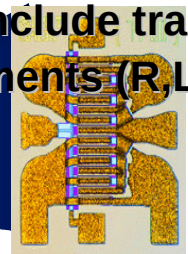

GaAs Transistor

GaAs Wafers

- SLICE - a another name for wafers
- LOT - A group of wafers (usually 3-7)

Other names for MMICS

Die, Bars, Chips, Circuits or Devices

Transistors are often refered to by their technology type

- FETS, pHEMTs, HFETS, HBTs

Or as

- Die, Bars,Chips,Circuits and, Devices

Gallium Arsenide Device Technologies

- MESFET -- MEtal Semiconductor Field Effect Transistor
  - Low Cost, Good Performance to 18GHz
- HFET -- Heterojunction Field Effect Transistor
  - High Efficiency Power Applications through X-band
- pHEMT -- Pseudo-Morphic High- Electron Mobility Transistor
  - High Performance (Power, PAE, or NF) through K band
- HBT -- Heterojunction Bipolar Transistor
  - High Performance (Power, PAE) Optimized for L and X Band

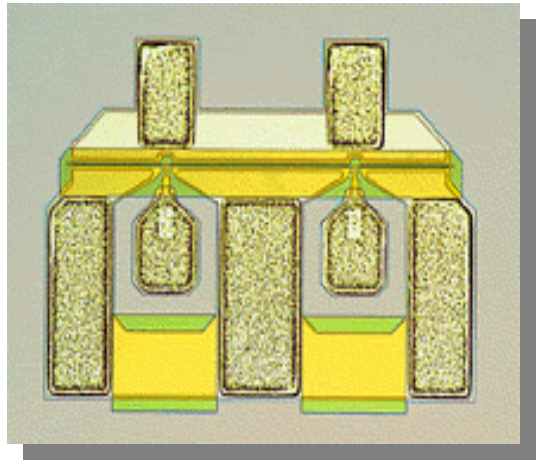

TGF1350-SCC 0.3mm MESFET

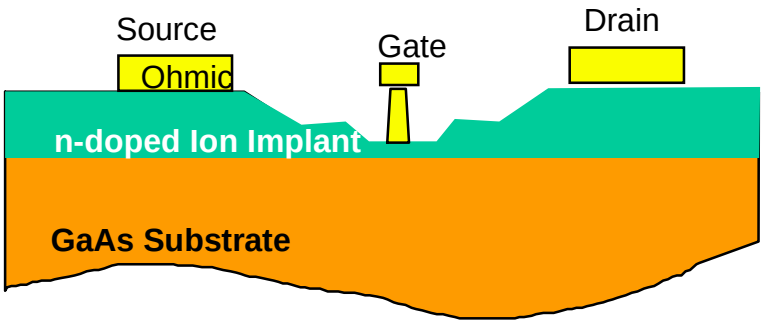

MESFET Structure

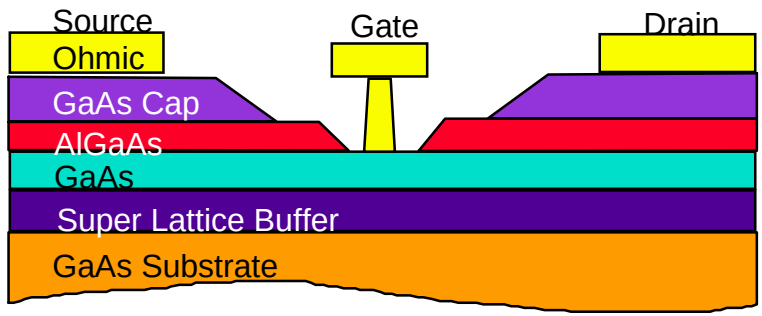

pHEMT/HFET Structure

Low Noise Amplifiers

- Critical performance characteristics of LNAs are specified by gain, Noise Figure (NF) and Third Order Intercept (TOI), a measurement of linearity
- Design Considerations for LNAs in LMDS systems
  - High linearity requirement due to widely varying signal levels. Typically, this is specified in terms of TOI.
  - Dynamic range is limited by noise figure at one extreme, and TOI at the other.
  - To achieve adequate dynamic range, the LNA design may trade modest increases in NF for significant increases in TOI.

Low Noise Amplifier MMIC

Key Characteristics

- Operating Frequency: 26 - 30 GHz
- Gain: 16 dB mean
- Noise Figure: 3.2 dB mean
- Output TOI: +23 dBm typical
- Single Supply Voltage, 5V @ 50 mA

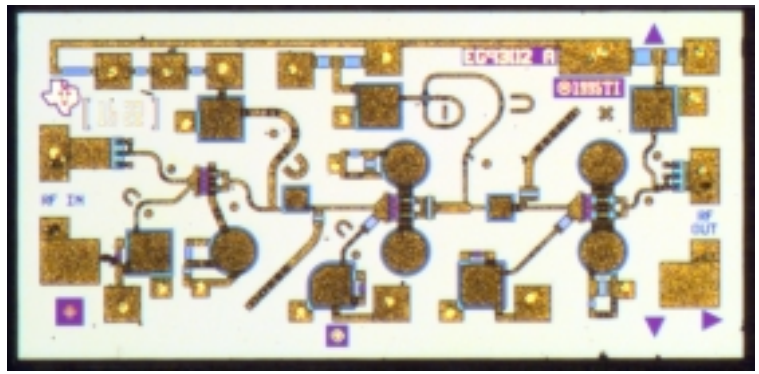

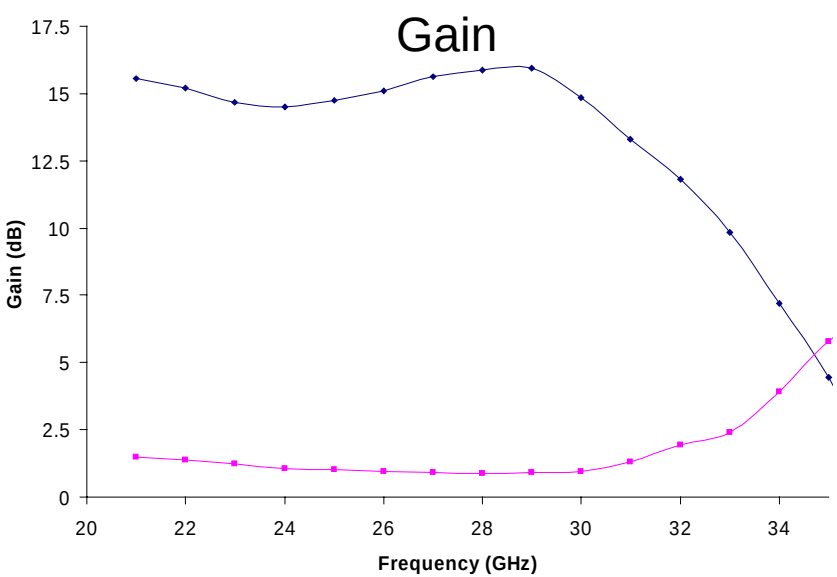

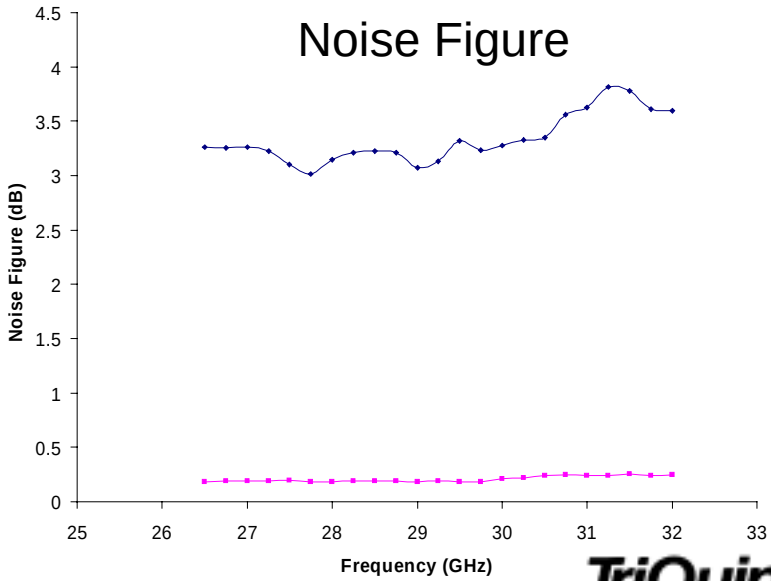

Power Amplifiers

- Critical performance characteristics of Power Amps are specified by gain, output power @ 1 dB compression (P1dB), output power at saturation (Psat), linearity (IMR3), DC power draw or alternatively efficiency.
- LMDS systems typically require 2 different transmit power amplifiers. A High (>= 1W) Power Amplifier for the base station, and a lower (~ .1W) PA for the CPE.
- Linearity requirements for HPAs are of critical importance, and vary with the system design.

Power Amplifiers

- Design Considerations
  - For both base station and CPE HPAs, the essential design objective is to minimize the cost in dc power and die size to deliver the required power and distortion levels.
  - Base station HPAs may present a slightly different design objective. That of maximizing the delivered power at a specified distortion level with maximum limits on dc power.
  - The design constraints of the linear power amplifier may result in subtle yet significant differences from the high efficiency saturated PA design

TGA1073A 26-34 GHz 0.3W MMIC PA

Key Features

- 0.25 um pHEMT Technology
- 19 dB Nominal Gain
- 25 dBm Nominal Pout @ P1dB
- -34.5 dBc IMR3 @ 15.5 dBm SCL
- Bias 5 - 7V @ 220 mA
- Chip Dimensions 1.95 mm x 1.12 mm

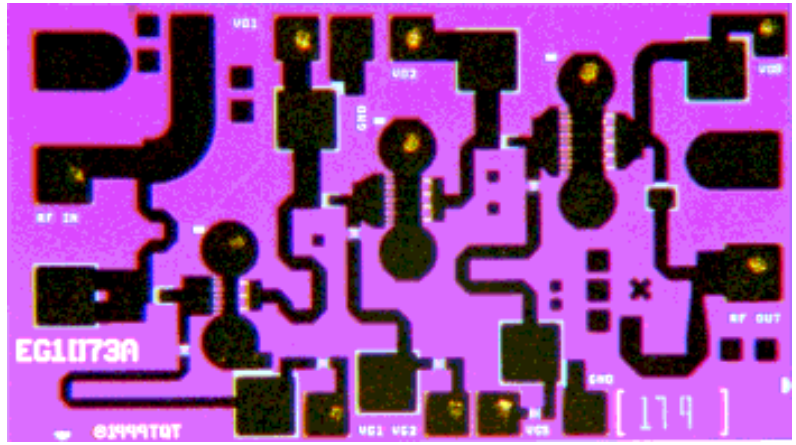

TGA1073A Typical RF Performance (Fixtured)

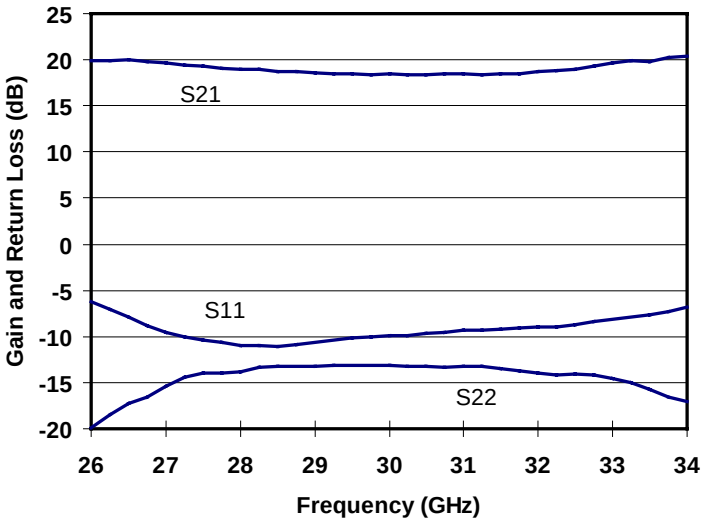

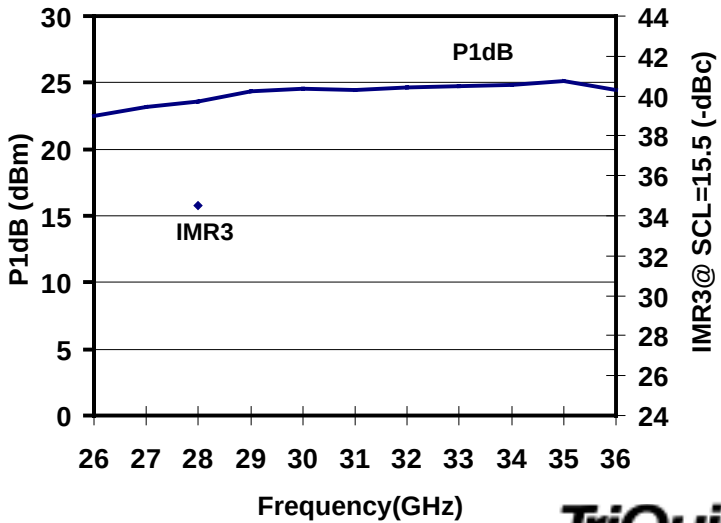

TriQuint SEMICONDUCTOR

TGA9070 23-29 GHz 1W MMIC PA

Key Features

- 0.25 um pHEMT Technology
- 22 dB Gain
- 30 dBm Nominal Pout @ P1dB
- Bias 7V @ 400 mA
- Chip Dimensions 4.1mm x 3.0mm

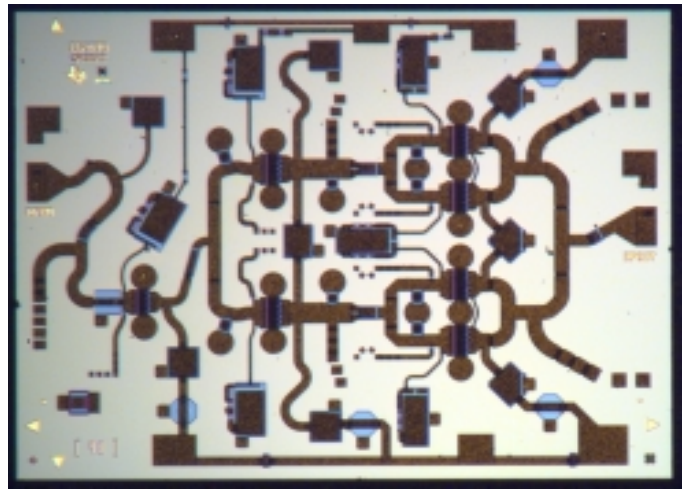

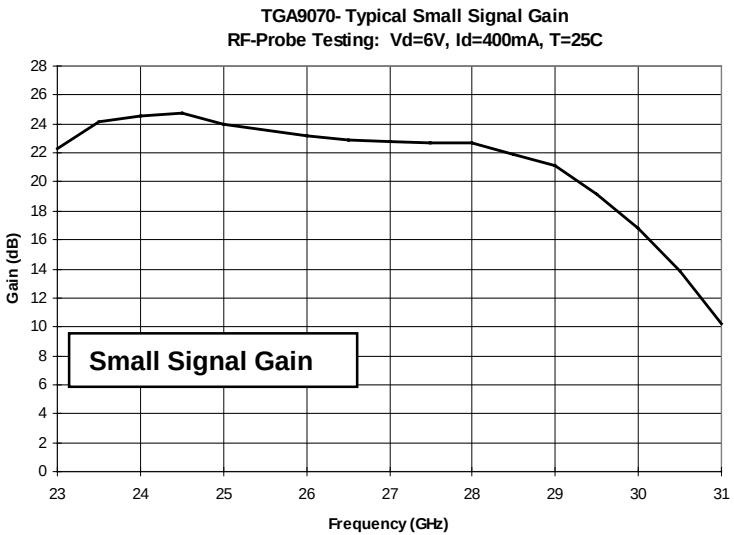

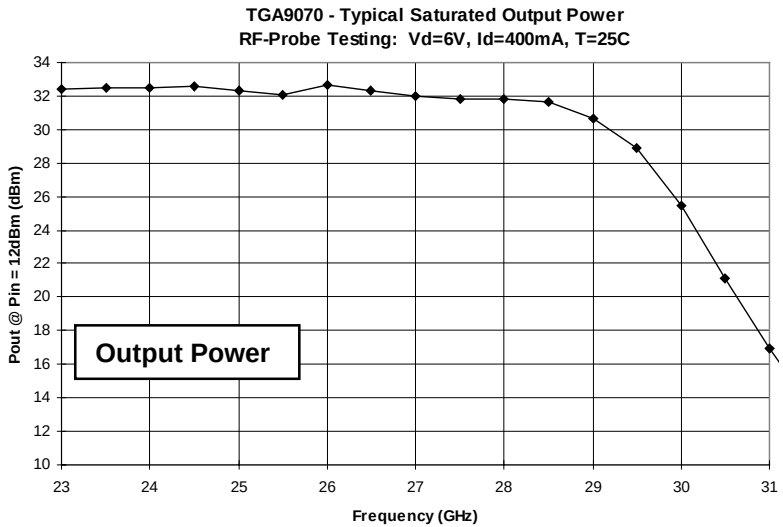

TGA1073B 27-32 GHz 0.7W MMIC PA

- **Key Features**
- 0.25 um pHEMT Technology
- 22 dB Nominal Gain @ 31 GHz
- 28.5 dBm Nominal Pout @ P1dB (7V)
- -38 dBc IMR3 @ 18 dBm SCL
- Bias 6 - 8 V @ 420 mA
- Chip Dimensions 3.12mm x 2.16mm

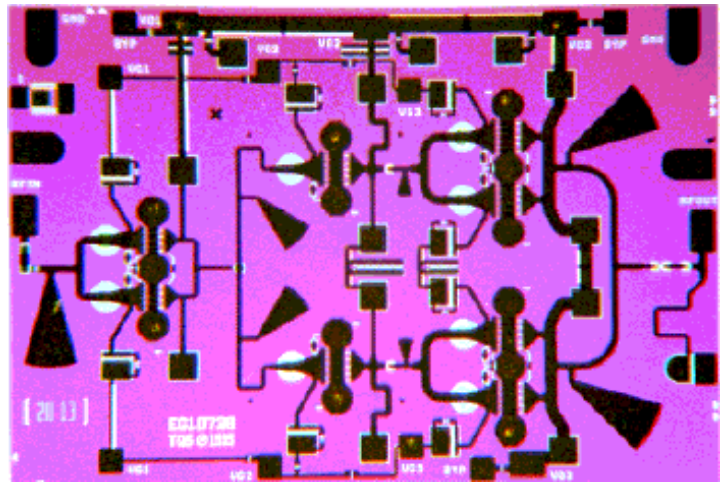

TGA1073B Typical RF Performance (Fixtured)

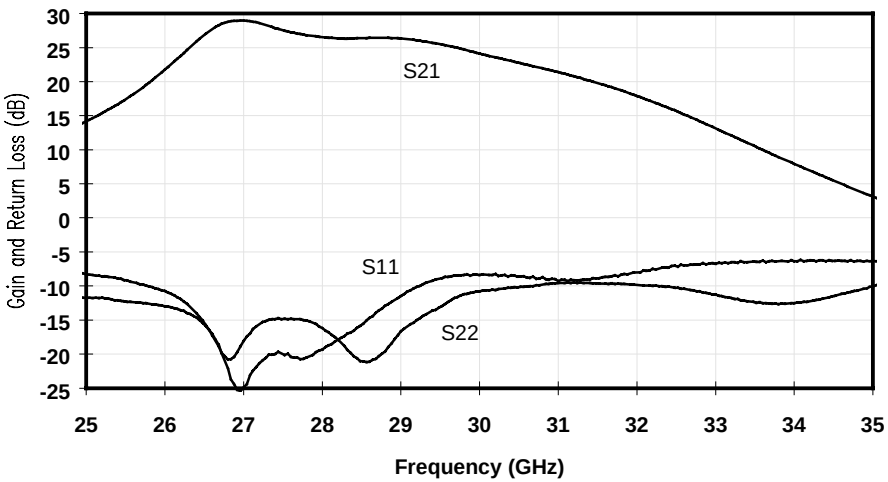

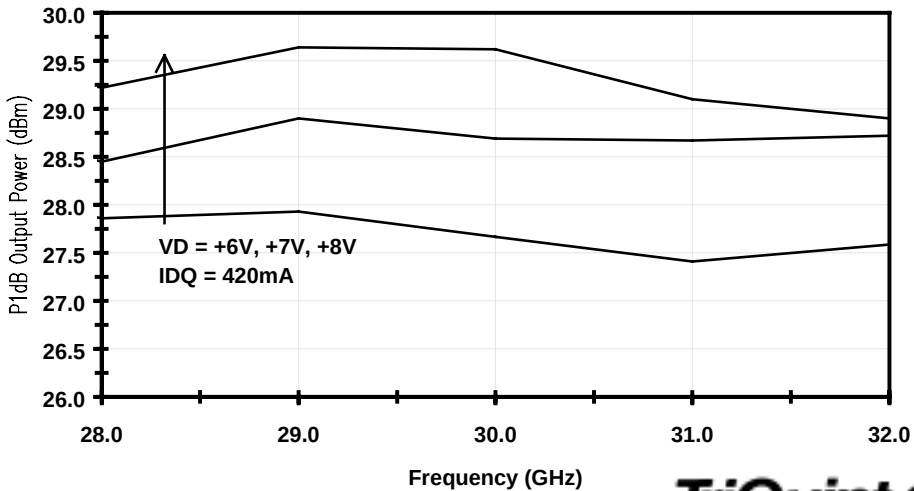

TGA1073C 37-41 GHz 0.4W MMIC PA

Key Features

- 0.25um pHEMT Technology
- 16 dB Nominal Gain
- 26 dBm Nominal Pout @ P1dB
- -34 dBc IMR3 @ 16 dBm SCL
- Bias 5 -7V @ 240 mA
- Chip Dimensions 2.40 mm x 1.45 mm

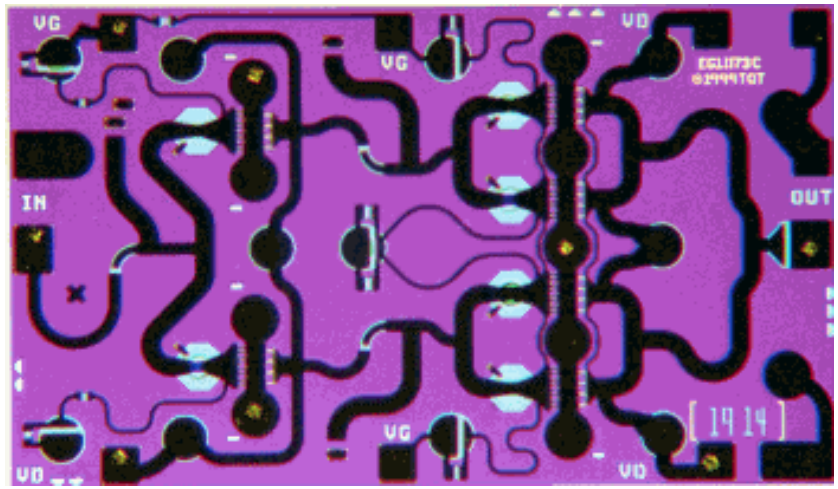

TGA1073C Typical RF Performance (Fixtured)

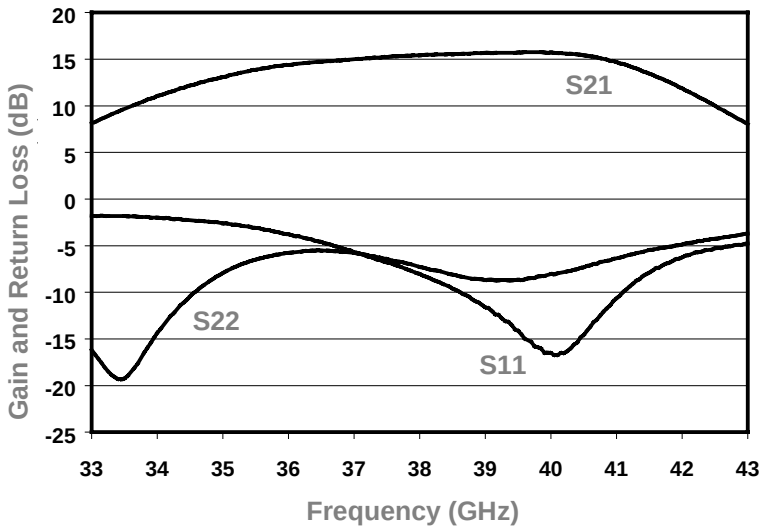

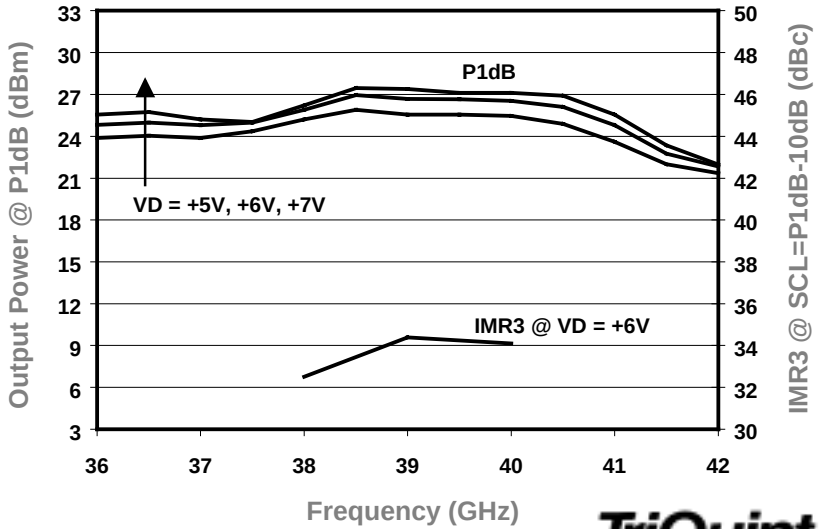

TriQuint SEMICONDUCTOR

TGA1073G 19-27 GHz 0.3W MMIC PA

Key Features

- 0.25 um pHEMT Technology
- 22 dB Nominal Gain
- 25 dBm Nominal Pout @ P1dB
- Bias 5-7V @ 220 mA
- Chip Dimensions 2.55 mm x 1.15mm

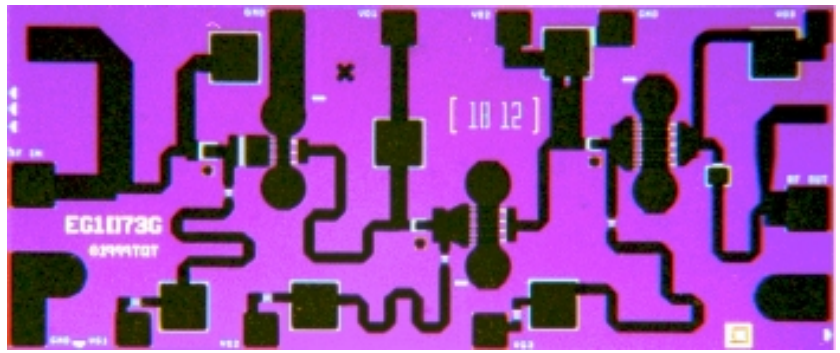

TGA1073G Typical RF Performance (Fixtured)

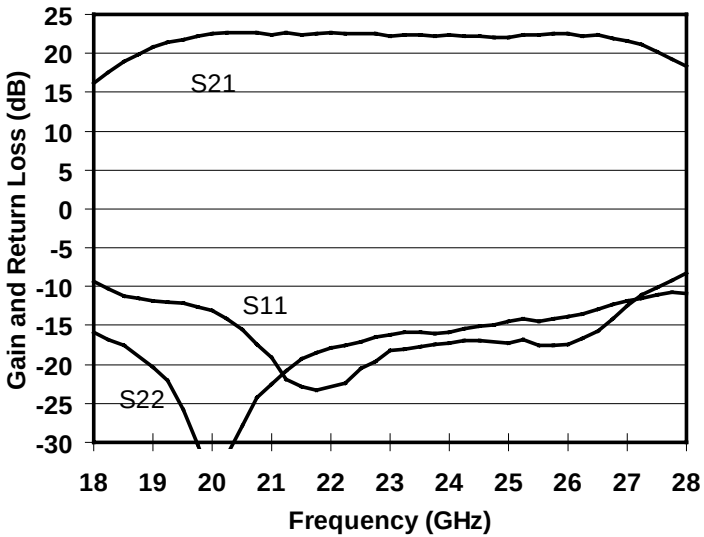

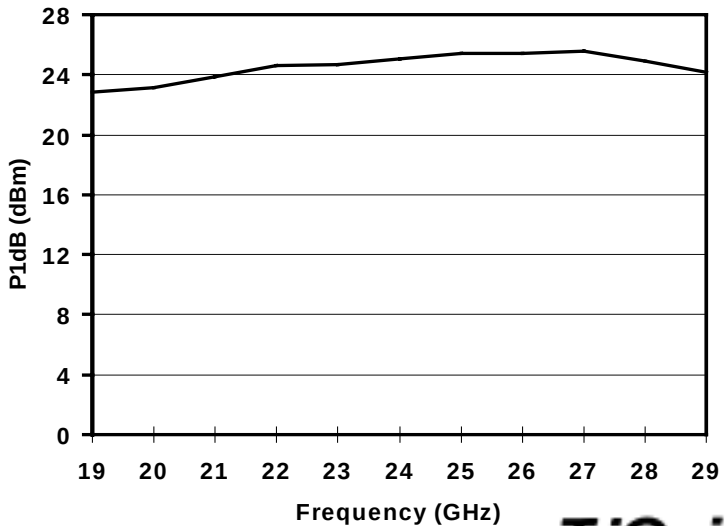

TriQuint SEMICONDUCTOR

Other Functions

- Various other functions may be implemented in MMIC form
  - mixers: up & downconverting, single and double balanced, image rejection…
  - multipliers
  - small signal gain blocks
  - attenuators, both digital and analog
  - switches
  - phase shifters (not often specified for LMDS)
- Multi-function MMICs which integrate conversion, amplification, multiplication and gain control functions may greatly impact system producibility and cost. Presently, the variety of system designs impairs the definition of a standard multifunction chip set.

-Summary

- GaAs MMICs provide the performance required to support LMDS system designs at their RF frequency bands.
- pHEMT is the dominant transistor technology for those MMICs.
- Linearity and Dynamic Range are driving forces in the design considerations for MMICs in LMDS applications.
- Opportunity for standardization of MMIC requirements may provide for enhanced functional integration and resultant benefits in the future.

TGA1055B 27-29 GHz 2W MMIC PA

Key Features

- 0.25 um pHEMT Technology
- 20 dB Nominal Gain
- 2W Nominal Pout
- -30 dBc IMR3 @ 26 dBm SCL
- Bias 7V @ 1.4 A
- Chip Dimensions 5.89 mm x 3.66 mm

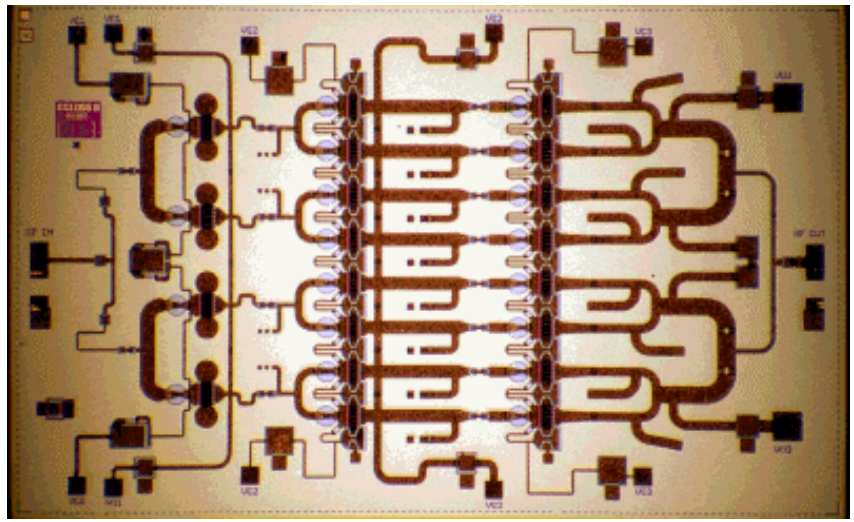
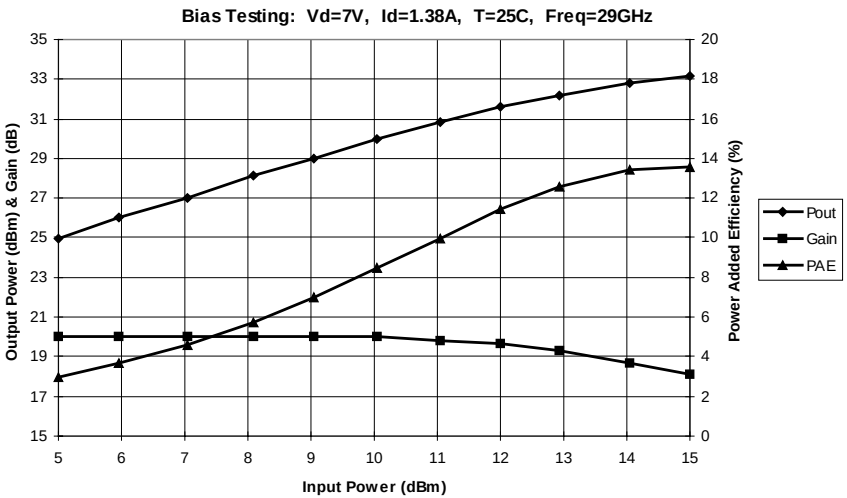
TGA1055B Typical RF Performance